JVC

SERVICE MANUAL

COMPACT COMPONENT SYSTEM

MX-D352TR

UNIT No. CA-D352TR/SP-D352

This Service Manual has only point of difference between MX-D302T and MX-D352TR.
Please,Details refer to Service Manual for MX-D302T (Issue No.20669).

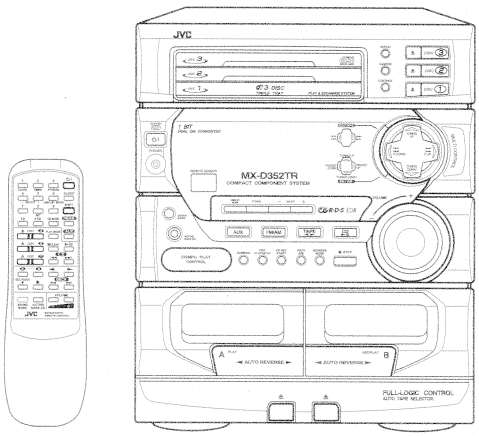

Area Suffix

B ---------- U.K.
E --------- Continental Europe
EN ------ North Europe

R·D·S EON

COMPACT disc DIGITAL AUDIO

Contents

Safety Precautions ---------- 1-2
Instruction Book ---------- 1-5～24
Parts list ---------- 2-1～25

COPYRIGHT© 1998 VICTOR COMPANY OF JAPAN, LTD.

No.20679
Apr. 1998

Safety Precautions

1. This design of this product contains special hardware and many circuits and components specially for safety purposes. For continued protection, no changes should be made to the original design unless authorized in writing by the manufacturer. Replacement parts must be identical to those used in the original circuits. Services should be performed by qualified personnel only.

2. Alterations of the design or circuitry of the product should not be made. Any design alterations of the product should not be made. Any design alterations or additions will void the manufacturer`s warranty and will further relieve the manufacture of responsibility for personal injury or property damage resulting therefrom.

3. Many electrical and mechanical parts in the products have special safety-related characteristics. These characteristics are often not evident from visual inspection nor can the protection afforded by them necessarily be obtained by using replacement components rated for higher voltage, wattage, etc. Replacement parts which have these special safety characteristics are identified in the Parts List of Service Manual. Electrical components having such features are identified by shading on the schematics and by (⚠) on the Parts List in the Service Manual. The use of a substitute replacement which does not have the same safety characteristics as the recommended replacement parts shown in the Parts List of Service Manual may create shock, fire, or other hazards.

4. The leads in the products are routed and dressed with ties, clamps, tubings, barriers and the like to be separated from live parts, high temperature parts, moving parts and/or sharp edges for the prevention of electric shock and fire hazard. When service is required, the original lead routing and dress should be observed, and it should be confirmed that they have been returned to normal, after re-assembling.

5. Leakage currnet check (Electrical shock hazard testing)
   After re-assembling the product, always perform an isolation check on the exposed metal parts of the product (antenna terminals, knobs, metal cabinet, screw heads, headphone jack, control shafts, etc.) to be sure the product is safe to operate without danger of electrical shock.
   Do not use a line isolation transformer during this check.
   - Plug the AC line cord directly into the AC outlet. Using a "Leakage Current Tester", measure the leakage current from each exposed metal parts of the cabinet , particularly any exposed metal part having a return path to the chassis, to a known good earth ground. Any leakage current must not exceed 0.5mA AC (r.m.s.)
   - Alternate check method
     Plug the AC line cord directly into the AC outlet. Use an AC voltmeter having, 1,000 ohms per volt or more sensitivity in the following manner. Connect a 1,500Ω 10W resistor paralleled by a 0.15μF AC-type capacitor between an exposed metal part and a known good earth ground.
     Measure the AC voltage across the resistor with the AC voltmeter.
     Move the resistor connection to eachexposed metal part, particularly any exposed metal part having a return path to the chassis, and meausre the AC voltage across the resistor. Now, reverse the plug in the AC outlet and repeat each measurement. voltage measured Any must not exceed 0.75 V AC (r.m.s.). This corresponds to 0.5 mA AC (r.m.s.).

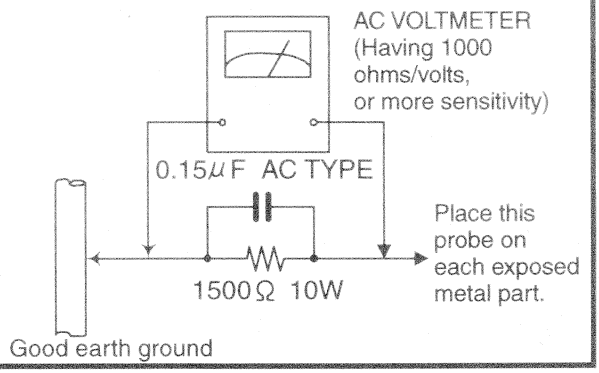

Warning

1. This equipment has been designed and manufactured to meet international safety standards.
2. It is the legal responsibility of the repairer to ensure that these safety standards are maintained.
3. Repairs must be made in accordance with the relevant safety standards.
4. It is essential that safety critical components are replaced by approved parts.
5. If mains voltage selector is provided, check setting for local voltage.

⚠ ***CAUTION*** **Burrs formed during molding may be left over on some parts of the chassis. Therefore, pay attention to such burrs in the case of preforming repair of this system.**

Safety Precautions (U.K only)

1. This design of this product contains special hardware and many circuits and components specially for safety purposes. For continued protection, no changes should be made to the original design unless authorized in writing by the manufacturer. Replacement parts must be identical to those used in the original circuits.
2. Any unauthorised design alterations or additions will void the manufacturer's guarantee ; furthermore the manufacturer cannot accept responsibility for personal injury or property damage resulting therefrom.
3. Essential safety critical components are identified by (⚠) on the Parts List and by shading on the schematics, and must never be replaced by parts other than those listed in the manual. please note however that many electrical and mechanical parts in the product have special safety related characteristics. These characteristics are often not evident from visual inspection. Parts other than specified by the manufacturer may not have the same safety characteristics as the recommended replacement parts shown in the Parts List of the Service Manual and may create shock, fire, or other hazards.
4. The leads in the products are routed and dressed with ties, clamps, tubings, barriers and the like to be separated from live parts, high temperature parts, moving parts and/or sharp edges for the prevention of electric shock and fire hazard. When service is required, the original lead routing and dress should be observed, and it should be confirmed that they have been returned to normal, after re-assembling.

Warning

1. Service should be performed by qualified personnel only.
2. This equipment has been designed and manufactured to meet international safety standards.
3. It is the legal responsibility of the repairer to ensure that these safety standards are maintained.
4. Repairs must be made in accordance with the relevant safety standards.
5. It is essential that safety critical components are replaced by approved parts.
6. If mains voltage selector is provided, check setting for local voltage.

⚠ ***CAUTION*** **Burrs formed during molding may be left over on some parts of the chassis. Therefore, pay attention to such burrs in the case of preforming repair of this system.**

Important for Laser Products

1.CLASS 1 LASER PRODUCT

2.DANGER : Invisible laser radiation when open and inter lock failed or defeated. Avoid direct exposure to beam.

3.CAUTION : There are no serviceable parts inside the Laser Unit. Do not disassemble the Laser Unit. Replace the complete Laser Unit if it malfunctions.

4.CAUTION : The compact disc player uses invisible laserradiation and is equipped with safety switches whichprevent emission of radiation when the drawer is open and the safety interlocks have failed or are de feated. It is dangerous to defeat the safety switches.

5.CAUTION : If safety switches malfunction, the laser is able to function.

6.CAUTION : Use of controls, adjustments or performance of procedures other than those specified herein may result in hazardous radiation exposure.

VARNING : Osynlig laserstrålning är denna del är öppnad och spårren är urkopplad. Betrakta ej strålen.

VARO : Avattaessa ja suojalukitus ohitettaessa olet alttiina näkymättömälle lasersäteilylle.Älä katso säteeseen.

ADVARSEL : Usynlig laserstråling ved åbning , når sikkerhedsafbrydere er ude af funktion. Undgå udsættelse for stråling.

ADVARSEL : Usynlig laserstråling ved åpning,når sikkerhetsbryteren er avslott. unngå utsettelse for stråling.

REPRODUCTION AND POSITION OF LABELS

WARNING LABEL

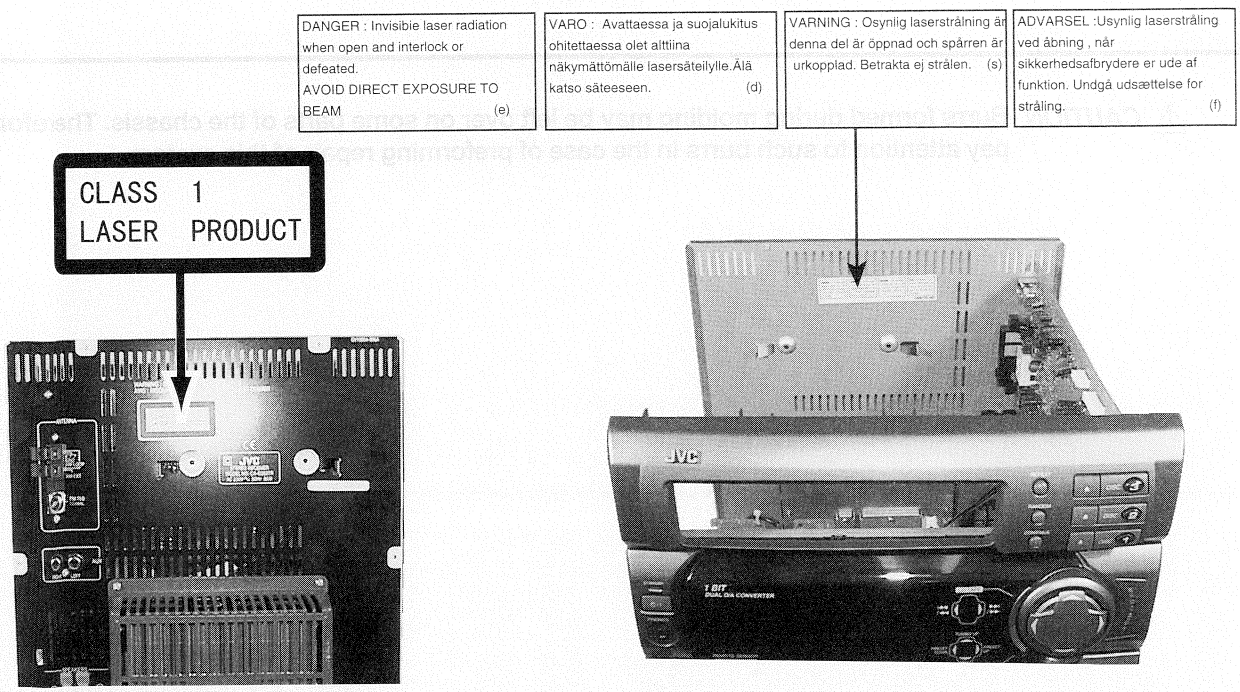

JVC

COMPACT COMPONENT SYSTEM

KOMPAKT-KOMPONENTEN-SYSTEM
SYSTEME DE COMPOSANTS COMPACT
KOMPACTO KOMPONENTEN-SYSTEEM
SISTEMAS DE COMPONENTES COMPACTOS
IMPIANTO A COMPONENTI COMPATTO

CA-D302T/CA-D352TR

COMPACT disc DIGITAL AUDIO

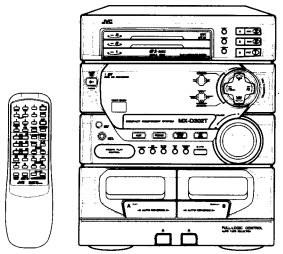

CA-D302T

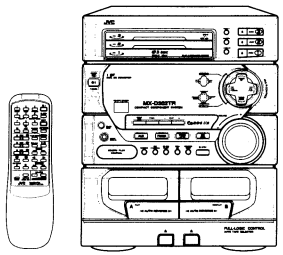

CA-D352TR

R·D·S EON

INSTRUCTIONS
BEDIENUNGSANLEITUNG
MANUEL D'INSTRUCTIONS
GEBRUIKSAANWIJZING
MANUAL DE INSTRUCCIONES
ISTRUZIONI

For Customer Use:
Enter below the Model No. and Serial No. which are located either on the rear, bottom or side of the cabinet. Retain this information for future reference.

Model No. _____

Serial No. _____

GVT0002-005A
[E]

Warnings, Cautions and Others / Warnung, Achtung und sonstige Hinweise /Mises en garde, précautions et indications diverses /Waarschuwingen, voorzorgen en andere mededelingen/Avisos, precauciones y otras notas / Avvertenze e precauzioni da osservare

IMPORTANT for the U.K.

DO NOT cut off the mains plug from this equipment. If the plug fitted is not suitable for the power points in your home or the cable is too short to reach a power point, then obtain an appropriate safety approved extension lead or consult your dealer.

BE SURE to replace the fuse only with an identical approved type, as originally fitted.

If nontheless the mains plug is cut off ensure to remove the fuse and dispose of the plug immediately, to avoid a possible shock hazard by inadvertent connection to the mains supply.

If this product is not supplied fitted with a mains plug then follow the instructions given below:

IMPORTANT:

DO NOT make any connection to the terminal which is marked with the letter E or by the safety earth symbol or coloured green or green-and-yellow.

The wires in the mains lead on this product are coloured in accordance with the following code:
Blue : Neutral
Brown : Live

As these colours may not correspond with the coloured markings identifying the terminals in your plug proceed as follows:

The wire which is coloured blue must be connected to the terminal which is marked with the letter N or coloured black.

The wire which is coloured brown must be connected to the terminal which is marked with the letter L or coloured red.

IF IN DOUBT - CONSULT A COMPETENT ELECTRICIAN.

Per l'Italia:
"Si dichiara che il questo prodotto di marca JVC è conforme alle prescrizioni del Decreto Ministeriale n.548 del 28/08/95 pubblicato sulla Gazzetta Ufficiale della Repubblica Italiana n.301 del 28/12/95."

Caution — ⏻/I switch!
Disconnect the mains plug to shut the power off completely. The ⏻/I switch in any position does not disconnect the mains line. The power can be remote controlled.

Achtung — ⏻/I-Schalter!
Den Netzstecker aus der Steckdose ziehen, um die Stromversorgung vollkommen zu unterbrechen. Der Schalter ⏻/I unterbrichet in keiner Stellung die Stromversorgung vollkommen. Die Stromversorgung kann mit der Fernbedienung ein- und ausgeschaltet werden.

Attention — Commutateur ⏻/I!
Déconnecter la fiche de secteur pour couper complètement le courant. Le commutateur ⏻/I ne coupe jamais complètement la ligne de secteur, quelle que soit sa position. Le courant peut être télécommandé.

Voorzichtig — ⏻/I schakelaar!
Om de stroomtoevoer geheel uit te schakelen, trekt u de stekker uit het stopkontakt. Anders zal er altijd een geringe hoeveelheid stroom naar het apparaat lopen, ongeacht de stand van de ⏻/I schakelaar. U kunt het apparaat ook met de afstandsbediening aan- en uitschakelen.

Precaución — Interruptor ⏻/I!
Desconectar el cable de alimentación para desactivar la alimentación totalmente. Cualquier que sea la posición de ajuste del interruptor ⏻/I, la alimentación no es cortada completamente. La alimentación puede ser controlada remotamente.

Attenzione — L'interruttore ⏻/I!
Disinserire la spina del cavo di alimentazione dalla presa della rete elettrica per staccare completamente l'alimentazione. L'interruttore ⏻/I in nessuna posizione stacca la linea di alimentazione elettrica principale. È possibile il controllo remoto dell'alimentazione.

CAUTION
To reduce the risk of electrical shocks, fire, etc.:
1. Do not remove screws, covers or cabinet.
2. Do not expose this appliance to rain or moisture.

ACHTUNG
Zur Verhinderung von elektrischen Schlägen, Brandgefahr, usw:
1. Keine Schrauben lösen oder Abdeckungen entfernen und das Gehäuse nicht öffnen.
2. Dieses Gerät weder Regen noch Feuchtigkeit aussetzen.

ATTENTION
Afin d'éviter tout risque d'électrocution, d'incendie, etc.:
1. Ne pas enlever les vis ni les panneaux et ne pas ouvrir le coffret de l'appareil.
2. Ne pas exposer l'appareil à la pluie ni à l'humidité.

VOORZICHTIG
Ter vermindering van gevaar voor brand, elektrische schokken, enz.:
1. Verwijder geen schroeven, panelen of de behuizing.
2. Stel het toestel niet bloot aan regen of vocht.

PRECAUCIÓN
Para reducir riesgos de choques eléctricos, incendio, etc.:
1. No extraiga los tornillos, los cubiertas ni la caja.
2. No exponga este aparato a la lluvia o a la humedad.

ATTENZIONE
Per ridurre il rischio di shock elettrici, incendi, ecc...
1. Non togliete viti, coperchi o la scatola.
2. Non esponete l'apparecchio alla piogggia e all'umidità.

Caution: Proper Ventilation
To avoid risk of electric shock and fire, and to prevent damage, locate the apparatus as follows:
1 Front:
No obstructions and open spacing.
2 Sides/ Top/ Back:
No obstructions should be placed in the areas shown by the dimensions below.
3 Bottom:
Place on the level surface. Maintain an adequate air path for ventilation by placing on a stand with a height of 10 cm or more.

Voorzichtig: Goede ventilatie vereist
Om brand, elektrische schokken en beschadiging te voorkomen, moet u het toestel als volgt opstellen:
1 Voorkant:
Geen belemmeringen en voldoende ruimte.
2 Zijkanten/boven-/onderkant:
Geen belemmeringen plaatsen in de hieronder aangegeven zones.
3 Onderkant:
Op vlakke ondergrond plaatsen. Voldoende ventilatieruimte voorzien door het toestel op een onderstel met een hoogte van 10 cm of meer te plaatsen.

Achtung: Ausreichende Belüftung
Zur Vermeidung von elektrischen Schlägen, Feuer und sonstigen Schäden sollte das Gerät unter folgenden Bedingungen aufgestellt werden:
1 Vorderseite:
Hindernisfrei und gut zugänglich.
2 Seiten- und Rückwände:
Hindernisfrei in allen gegebenen Abständen (s. Abbildung).
3 Unterseite:
Die Stellfläche muß absolut eben sein. Sorgen Sie für ausreichende Luftzufuhr durch Aufstellung auf einem Stand mit mindestens 10 cm Höhe.

Precaución: ventilación correcta
Para evitar el riesgo de descargas eléctricas e incendio y prevenir posibles daños, instale el equipo en un lugar que cumpla los siguientes requisitos:
1 Parte frontal:
Sin obstrucciones, espacio abierto.
2 Lados/parte superior/parte posterior:
No debe haber ninguna obstrucción en las áreas mostradas por las dimensiones de la siguiente figura.
3 Parte inferior:
Sitúe el equipo sobre una superficie nivelada. Mantenga un espacio adecuado para permitir el paso del aire y una correcta ventilación, situando el equipo sobre un soporte de 10 o más cm de allura.

Attention: Aération correcte
Pour prévenir tout risque de décharge électrique ou d'incendie et éviter toute détérioration, installez l'appareil de la manière suivante:
1 Avant:
Bien dégagé de tout objet.
2 Côtés/dessus/dessous:
Assurez-vous que rien ne bloque les espaces indiqués sur le schéma ci-dessous.
3 Dessous:
Posez l'appareil sur une surface plane et horizontale. Veillez à ce que sa ventilation correcte puisse se faire en le plaçant sur un support d'au moins dix centimètres de hauteur.

Attenzione: Per una corretta ventilazione
Per prevenire il rischio di scosse elettriche e di incendio ed evitare possibili danni, collocare le apparecchiature nel modo seguente:
1 Parte anteriore:
Nessun ostacolo e spazio libero.
2 Lati/Parte superiore/Retro:
Lasciare libere le zone indicate dalle dimensioni di seguito.
3 Base:
Collocare su una superficie piana. Consentire un'adeguata ventilazione dell'impianto appoggiandolo su un tavolinetto alto almeno 10 cm.

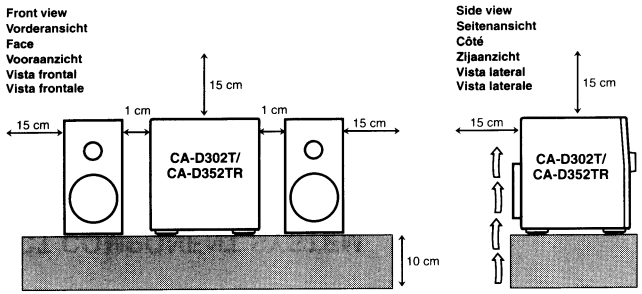

IMPORTANT FOR LASER PRODUCTS/ WICHTIGER HINWEIS FÜR LASER-PRODUKTE / IMPORTANT POUR LES PRODUITS LASER / BELANGRIJKE INFORMATIE VOOR LASERPRODUKTEN / IMPORTANTE PARA LOS PRODUCTOS LÁSER / IMPORTANTE PER I PRODOTTI LASER

REPRODUCTION OF LABELS/ANBRINGUNGSORTE FÜR LASER-PRODUKTE/REPRODUCTION DES ETIQUETTES/VERKLARING VAN DE LABELS/REPRODUCCIÓN DE ETIQUETAS/RIPRODUZIONE DELLE ETICHETTE

(1) CLASSIFICATION LABEL, PLACED ON REAR ENCLOSURE
(1) KLASSIFIKATIONSETIKETTE AN DER RÜCKSEITE
(1) ETIQUETTE DE CLASSIFICATION, PLACÉE A L'ARRIÈRE DU COFFRET
(1) KLASSIFIKATIELABEL, OP DE ACHTERZIJDE VAN HET APPARAAT
(1) ETIQUETA DE CLASIFICACIÓN, PEGADA EN LA PARTE POSTERIOR DE LA CAJA
(1) ETICHETTA DI CLASSIFICAZIONE, SITUATA SUL RIVESTIMENTO POSTERIORE

(2) WARNING LABEL, PLACED INSIDE THE UNIT
(2) WARNETIKETTE IM GERÄTEINNEREN
(2) ETIQUETTE D'AVERTISSEMENT PLACÉE À L'INTERIEUR DE L'APPAREIL
(2) WAARSCHUWINGSLABEL, IN HET APPARAAT
(2) ETIQUETA DE ADVERTENCIA, PEGADA EN EL INTERIOR DE LA UNIDAD
(2) ETICHETTA DI AVVERTENZA, SITUATA ALL'INTERNO DELL'APPARECCHIO

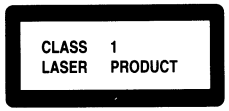

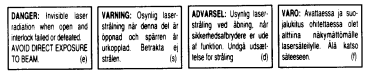

1. CLASS 1 LASER PRODUCT
2. **DANGER**: Invisible laser radiation when open and interlock failed or defeated. Avoid direct exposure to beam.
3. **CAUTION**: Do not open the top cover. There are no user serviceable parts inside the Unit; leave all servicing to qualified service personnel.

1. KLAS 1 LASERPRODUKT
2. **GEVAARLIJK**: Onzichtbare laserstraling wanneer open en de beveiliging faalt of uitgeschakeld is. Voorkom het direkt blootstaan aan de straal.
3. **VOORZICHTIG**: De bovenkap niet openen. Binnenin het toestel bevinden zich geen door de gebruiker te repareren onderdelen: laat onderhoud over aan bekwaam vakpersoneel.

1. LASER-PRODUKT DER KLASSE 1
2. **GEFAHR:** Unsichtbare Laserstrahlung bei Öffnung und fehlerhafter oder beschädigter Spre. Direkten Kontakt mit dem Strahl vermeiden!
3. **ACHTUNG:** Das Gehäuse nicht öffnen. Das Gerät enthält keinerlei Teile, die vom Benutzer gewartet werden können. Überlassen Sie Wartungsarbeiten bitte qualifizierten Kundendienst-Fachleuten.

1. PRODUCTO LASER CLASE 1
2. **PELIGRO**: En el interior hay radiación láser invisible. Evite el contacto directo con el haz.
3. **PRECAUCIÓN**: No abra la tapa superior. En el interior de la unidad no existen piezas reparables por el usuario; deje todo servicio técnico en manos de personal calificado.

1. PRODUIT LASER CLASSE 1
2. **ATTENTION:** Radiation laser invisible quand l'appareil est ouvert ou que le verrouillage est en panne ou désactivé. Eviter une exposition directe au rayon.
3. **ATTENTION:** Ne pas ouvrir le couvercle du dessus. Il n'y a aucune pièce utilisable à l'intérieur. Laisser à un personnel qualifié le soin de réparer votre appareil.

1. PRODOTTO LASER CLASSE 1
2. **PERICOLO:** Radiazione laser invisibile quando l'apparecchio è aperto ed il dispositivo di sicurezza è guasto o disattivato. Evitare l'esposizione diretta ai raggi.
3. **ATTENZIONE:** Non aprire il coperchio superiore. Non vi sono parti adoperabili dall'utente all'interno di questo apparecchio; lasciare tutti i controlli a personale qualificato.

Thank you for purchasing the JVC Compact Component System.
We hope it will be a valued addition to your home, giving you years of enjoyment.

Be sure to read this instruction manual carefully before operating your new stereo system.
Here you will find all the information you need to set up and use the system.
For questions that are not be answered in the manual, please contact your dealer.

Features

Easy operation

COMPU PLAY

Great sound

R·D·S EON

Triple Tray

Here are some of the things that make your System powerful and easy to use.

- The controls and operations have been redesigned to make them very easy to use, so you can spend your time listening to music.
  - With the One Touch Operation feature of JVC's **COMPU PLAY** you can turn on the System and start the radio, the Cassette Deck, or the CD Player with a single touch.
- To get such great sound from such a compact package the System has:
  - Programmed sound mode includes live surround effects **D. CLUB, HALL,** and **STADIUM**. It also includes S.E.A (Sound Effect Amplifier) effects **ROCK, CLASSIC,** and **POP**.
- The System is compatible with RDS (Radio Data System) broadcasting. (CA-D352TR only)
  - The EON data enables you to standby for desired information.
  - The PTY Search function searches for programmes in the category you wish.

  In addition, Radio Text can be displayed using data sent by station.
- CD changer function can operate 3 discs.
  - Discs can be changed during play using the **TRIPLE TRAY**.
  - Continuous, random or program play of 3 discs.
- Includes a timer for recording broadcasts while you are out, and an easy-to-use Sleep timer.

How This Manual Is Organized

In this manual we have incorporated some special features:

- Basic information that is the same for many different functions is grouped in one place, and not repeated in each procedure. For instance, in the section on playing a CD, we do not repeat the information about setting the volume and the sound conditions, which are discussed in the Common Operations section.
- Name of buttons and controls are written in all capital letters like this: SOUND MODE.

The manual has a table of contents to help you quickly look up what you want to know.
We've enjoyed making this manual for you, and hope you will use it to enjoy the sound and many features built into your System.

IMPORTANT CAUTIONS

1. Installation of the Unit

- Select a place which is level, dry and neither too hot nor too cold. (Between 5°C and 35°C or 41°F and 95°F.)
- Leave sufficient distance between the Unit and a TV.
- Do not use the Unit in a place subject to vibrations.

2. Power cord

- Do not handle the power cord with wet hands!
- Some power (7 watts) is always consumed as long as the power cord is connected to the wall outlet.
- When unplugging the Unit from the wall outlet, always pull the plug, not the power cord.

3. Malfunctions, etc.

- There are no user-serviceable parts inside. If anything goes wrong, unplug the power cord and consult your dealer.
- Do not insert any metallic object into the Unit.

English

English

Table of Contents

Features 1
How This Manual Is Organized 1
IMPORTANT CAUTIONS 1

Getting Started 3
Accessories 3
How to Put Batteries in the Remote Control 3
Using the Remote Control 3
Connecting the FM Antenna 4
Connecting the AM (MW/LW) Antenna 4
Connecting the Speakers 5
Connecting Auxiliary Equipment 5
COMPU PLAY 6

Common Operations 7
Turning the Power On and Off 7
Turning the System On 7
Turning the System Off 7
Adjusting the Volume 8
Reinforcing the Bass Sound 8
Sound Modes 8
Listening to Auxiliary Equipment 9

Using the Tuner 10
One Touch Radio 11
Tuning In a Station 11
Switching between Frequency Bands 11
Three Ways to Select a Station 11
Changing the FM Reception Mode 11
Presetting Stations 12
Receiving FM Stations with RDS (CA-D352TR only) 12
What Information RDS can Provide 12
Changing the Display 13
Searching for Programmes by PTY codes 13
EON Function 14
ALARM function 15

Using the CD Player 16
The Quickest Way to Start a CD Is with the One Touch Operation 17
Loading Discs 17
Basics of Using the CD Player — Normal Play 18
Playing a Disc 18
Selecting a Disc, Track or Passage Within a Track 18
Locating a Track With the Remote Control Directly 18
Changing Discs While Playing 18
Continuous Play 19
Programming the Playing Order of the Tracks 19
Random Play 20
Repeating a Selection or the Discs 21
Tray Lock Function 21
Locking the Trays 21
Unlocking the Trays 21

Using the Cassette Deck (Listening to a Tape) 22
One Touch Play 22
Regular Play 22
Fast Left And Fast Right 23
Music Scan 23
Finding the Beginning of the Current Selection 23
Finding the Beginning of the Next Selection 23
Reverse Mode 23

Using the Cassette Deck (Recording) 24
Things to Know before You Start Recording 24
Standard Recording 25
Recording AM Station to Tape 26
CD Direct Recording 26
Tape to Tape Recording (Dubbing) 26
How to Use the DUBBING Button 26

Using the Timer 27
Setting the Clock 27
Setting the Timer 28
Setting the Sleep Timer 29

Care And Maintenance 30

Troubleshooting 31

Specifications 32

Getting Started

English

Accessories

Check that you have all of the following items, which are supplied with the System.

AM (MW/LW) Loop Antenna (1)
Remote Control (1)
Batteries (2)
FM Wire Antenna (1)

If any of these items is missing, contact your dealer immediately.

How to Put Batteries in the Remote Control

Match the polarity (+ and –) on the batteries with the + and – markings in the battery compartment.

R6P (SUM-3) / AA (15F)

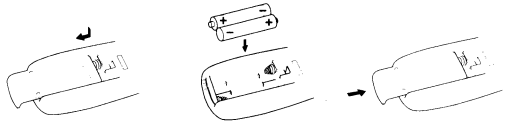

CAUTION: Handle batteries properly.
To avoid battery leakage or explosion:
- Remove batteries when the Remote Control will not be used for a long time.
- When you need to replace the batteries, replace both batteries at the same time with new ones.
- Do not use an old battery with a new one.
- Do not use different types of batteries together.

Using the Remote Control

The Remote Control makes it easy to use many of the functions of the System from a distance of up to 7m (23 feet) away.
You need to point the Remote Control at the remote sensor on the System's front panel.

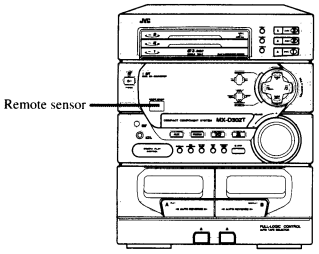

CA-D302T

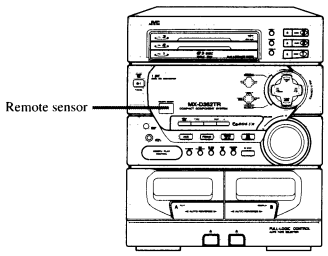

CA-D352TR

English

CAUTION: Make all connections before plugging the Unit into an AC power outlet.

Connecting the FM Antenna

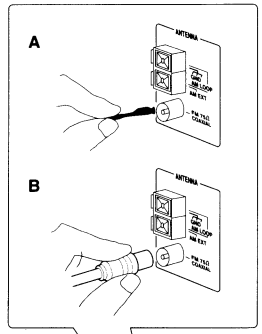

A. Using the Supplied Wire Antenna
The FM Wire Antenna provided can be connected to a FM 75-ohm COAXIAL as temporary measure.
Extend the supplied wire antenna horizontally.

B. Using the Standard Type Connector (Not Supplied)
A standard type connector (IEC or DIN 45325) should be connected to the FM 75-ohm COAXIAL terminal.

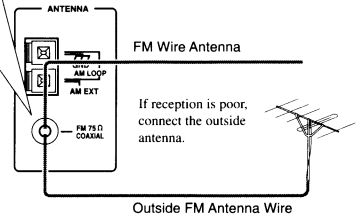

Before attaching a 75-ohm coaxial lead (the kind with a round wire going to an outside antenna), disconnect the supplied FM Wire Antenna.

CAUTION: To avoid noise, keep antennas away from metallic parts of the System, connecting cord and the AC power cord.

Connecting the AM (MW/LW) Antenna

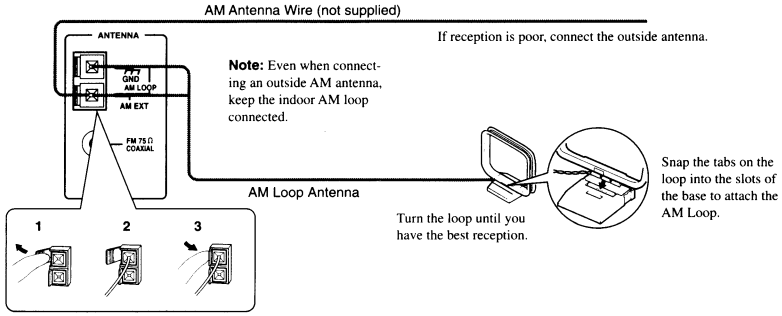

CAUTION: Make all connections before plugging the Unit into an AC power outlet.

Connecting the Speakers

■ Please refer to instructions for speakers as well when you connect speakers.

For each speaker, connect one end of the speaker wire to the speaker terminals on the back of the System.

1. Open each of the terminals and insert the speaker wires firmly, then close the terminals.
2. Connect the red (+) and black (–) terminals of the right side speaker to the red (+) and black (–) terminals marked RIGHT on the System.
   Connect the red (+) and black (–) terminals of the left side speaker to the red (+) and black (–) terminals marked LEFT on the System.

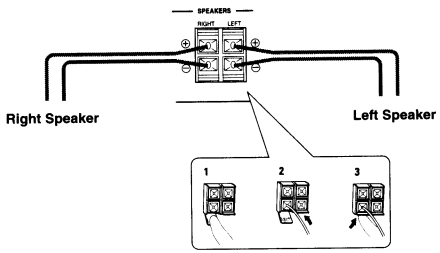

IMPORTANT: Use speakers with the correct impedance only. The correct impedance is indicated on the back panel.
CAUTION: If a TV is installed near speakers, the TV may display irregular colours. In this case, set the speakers away from the TV.

Connecting Auxiliary Equipment

VCR or other equipment
To listen to this source, press the AUX button.

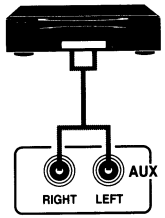

Now you can plug the AC power cord into the wall outlet, and your System is at your command!

English

COMPU PLAY

COMPU PLAY is JVC's feature that lets you control the most frequently used functions of the System with a single touch.
One Touch Operation starts playing a CD, turns on the radio, plays a tape, etc. with a single press of the play button for that function. What One Touch Operation does for you is to turn the power on, then start the function you have specified. If the Unit is not ready, such as no CD or tape in place, the Unit still powers on so you can insert a CD or tape.
How One Touch Operation works in each case is explained in the section dealing with that function.
The COMPU PLAY buttons are:

On the Unit

CD ►/II button
CD Player DISC 1 to DISC 3 buttons
CD Player Open/Close (⏏) buttons
FM/AM button
TAPE ◄ ► button
AUX button

On the Remote Control

FM/AM button
AUX button
CD control ►/II button
CD control DISC 1 to DISC 3 buttons
CD control Open/Close (⏏) buttons
Deck control ◄, ► buttons

Common Operations

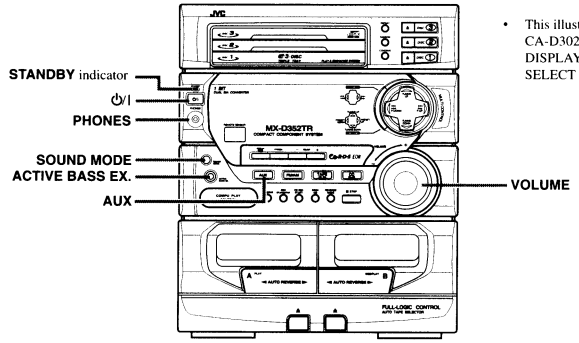

- This illustration is of CA-D352TR. CA-D302T does not have the DISPLAY MODE, PTY/EON, and SELECT –, + buttons.

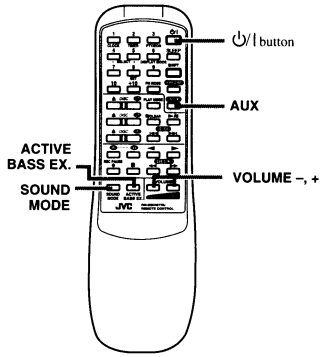

This illustration shows the Remote Control for CA-D352TR. The Remote Control for CA-D302T does not print the PTY/EON and DISPLAY MODE labels.

Display

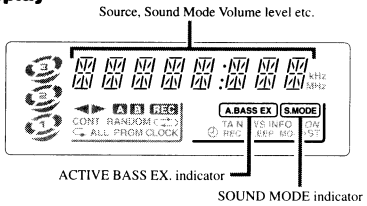

When the System is being used, the display shows other items as well. However, we have only shown the items described in this section.

Turning the Power On and Off

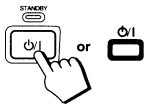

Turning the System On

Press the ⏻/I button.

The display comes on and the STANDBY indicator goes off.
The System comes on ready to continue in the mode it was for when the power was last turned off.

- If the last thing you were doing was listening to a tape in Deck B, you are now ready to listen to a tape again in Deck B, or you can change to another source.
- If you were listening to the Tuner last, the Tuner comes on playing the station it was last set to.

Turning the System Off

Press the ⏻/I button again.

The STANDBY indicator lights up and the display is blank, except for the clock display.

- Some power (7 watts) is always consumed even though power is turned off (called Standby Mode).
- To switch off the Unit completely, unplug the AC power cord from the AC outlet. When you unplug the AC power cord, the clock will be reset to 0:00 immediately, and preset Tuner stations will be erased in a few days.

English

English

Adjusting the Volume

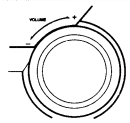

or

Turn the VOLUME control clockwise to increase the volume or anticlockwise to decrease it.
Turning the VOLUME control quickly also adjusts the volume level quickly.
When using the Remote Control, press the VOLUME + button to increase the volume or press the VOLUME – button to decrease it.
You can adjust the volume level between 0 and 50.

VOLUME 0

CAUTION: The Volume cannot be adjusted while the Unit is in STANDBY mode. DO NOT turn on the Unit and/or start playing any source without setting the VOLUME control to 0; otherwise, the sudden blast of sound can damage your hearing, speakers and/or headphones.

For private listening

Connect a pair of headphones to the PHONES jack. No sound comes out of the speakers.
Be sure to turn down the volume before connecting or putting on headphones.

Reinforcing the Bass Sound

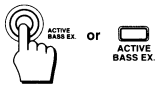

The richness and fullness of the bass sound is maintained regardless of how low you set the volume.
You can use this effect only for playback.

To get the effect, press the ACTIVE BASS EX. (Active Bass Extension) button.
The frame around the A. BASS EX indicator lights up. **A.BASS EX**

To cancel the effect, press the button again.
The frame around the A. BASS EX indicator goes off. **A.BASS EX**

Sound Modes

The System has some preset sound effects that give you control of the way your music sounds, so you can tailor it for your room and for the quality of the source. We can give you some idea of how each one affects the music, but the only way to really tell is to try them yourself.

- The preset sound modes include modes using surround effects and modes using S.E.A. effects.
- Sound Mode effects cannot be recorded.

Surround effect modes

D. CLUB (Dance Club)	Increases resonance and bass.
HALL	Adds depth and brilliance to the sound, like in a concert hall.
STADIUM	Adds clarity and spreads the sound, like in an outdoor stadium.

S.E.A. effect modes

ROCK	Boosts low and high frequencies.
CLASSIC	Set for wide and dynamic sound stereo systems.
POP	Good for vocal music.

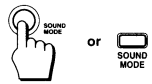

To get an effect, press the SOUND MODE button repeatedly until the Sound Mode you want appears on the display. The frame around the S.MODE indicator lights up. **S.MODE**
Each time you press the SOUND MODE button, the display changes as follows:

→ **D. CLUB** → **HALL** → **STADIUM** → **ROCK** → **CLASSIC** → **POP** → **FLAT** → (back to the beginning)

To cancel an effect, press the SOUND MODE button until "FLAT" appears on the display. The frame around the S. MODE indicator goes out. **S.MODE**

To recall the previous Sound Mode, press the SOUND MODE button again.

Listening to Auxiliary Equipment

By playing the sound from auxiliary equipment through the System, you can gain control over how the music or program sounds. Once the connected equipment is playing through the System, you can apply the sound effects.

■ First make sure that the optional equipment is properly connected to the System. (See page 5).

1. Set the VOLUME control to 0.

2. Press the AUX button.
When System is in Standby mode, the Unit is automatically turned on and "AUX" appears on the display. The AUX button on the Unit lights up.

AUX

3. Start playing the equipment.

4. Adjust the VOLUME control to the desired listening level.

5. Select a Sound Mode, if you wish.

To Cancel the Setting

Change the source by starting any one of the System's built-in sound sources, such as the Tuner or CD Player.

English

English

Using the Tuner

CA-D352TR

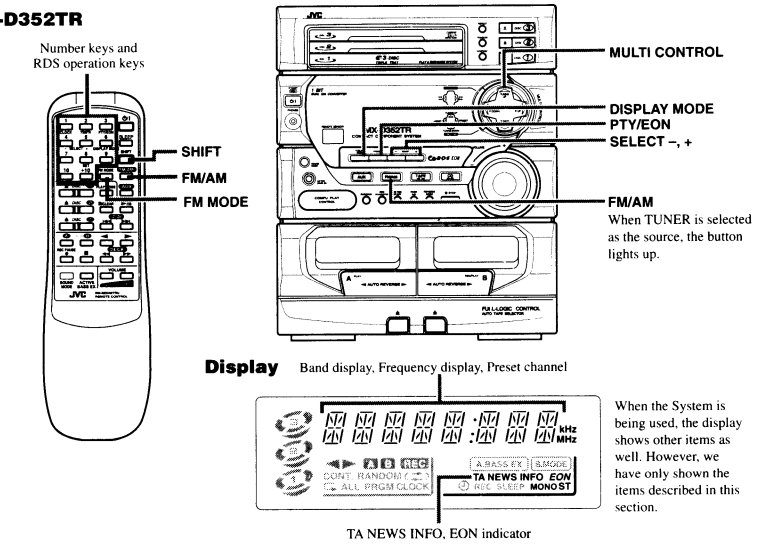

CA-D302T

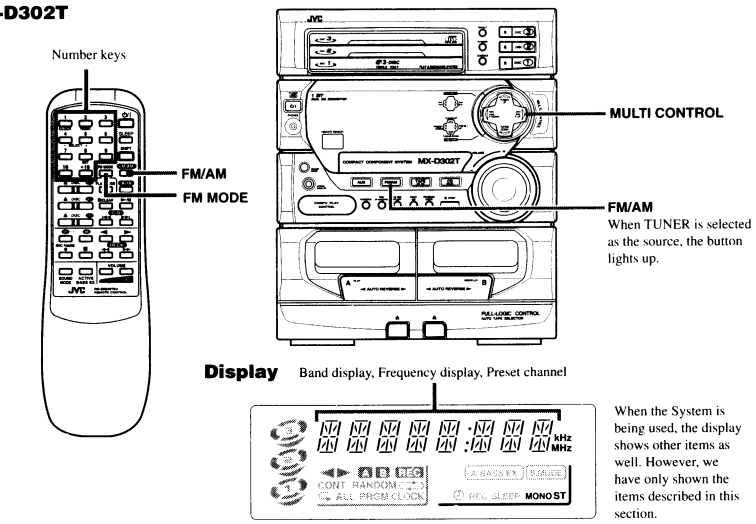

You can listen to both FM and AM (MW/LW) stations. Stations can be tuned in manually, automatically, or from preset memory storage.

■ Before listening to the radio:
- Check that both the FM and AM (MW/LW) antennas are firmly connected. (See page 4).

COMPU PLAY

One Touch Radio

Just press the FM/AM button to turn on the Unit and start playing the most recent station tuned in.

■ You can switch from any other sound source to the radio by pressing the FM/AM button.

Tuning In a Station

Press the FM/AM button to turn on the radio.
The Frequency of the previously selected channel appears on the display.

Switching between Frequency Bands

Press the FM/AM button.

Each time you press the button, the band alternates between FM and AM (MW/LW).

Three Ways to Select a Station

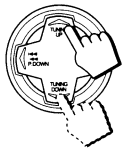

■ Press the TUNING DOWN or TUNING UP on the MULTI CONTROL repeatedly to move from frequency to frequency until you find the one you want. (Manual Tuning).

OR

■ Press and hold the TUNING DOWN or TUNING UP on the MULTI CONTROL for a few seconds, the frequency starts changing on the display. When a station is tuned in, the frequency stops changing. (Auto Tuning).

OR

■ Possible only after presetting stations.
Press once and release the |◀◀/◀◀ P. DOWN or ▶▶|/▶▶ P. UP on the MULTI CONTROL to go to the next preset station.

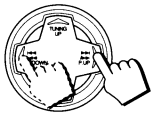

You can also use the Remote Control to tune in preset channels:

1. Press the FM/AM button so that you can receive the most recent station tuned in.
2. Select the station by entering the preset number in the number keys of the Remote Control.
   - Example: for channel 5, press 5. For channel 15, press +10 then 5. For channel 20, press +10, then 10. For channel 30, press +10 twice then 10.

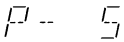

- After you have selected the preset number and the number is displayed, the broadcast frequency of the selected channel is displayed.

Changing the FM Reception Mode

When an FM stereo broadcast is hard to receive or noisy, press the FM MODE button on the Remote Control so that the MONO indicator lights up on the display. Reception improves, but there is no stereo effect.

To restore the stereo effect, press the FM MODE button on the Remote Control so that the MONO indicator goes off. In this stereo mode, the ST indicator lights up and you can hear stereo effects, when a program is broadcast in stereo.

Presetting Stations

You can preset up to 30 FM stations and up to 15 AM stations for the preset numbers.
Note: In some cases, test frequencies have been already memorized for the tuner since the factory examined the tuner preset function before shipment. This is not a malfunction. You can preset the stations you want into memory by following the presetting method.

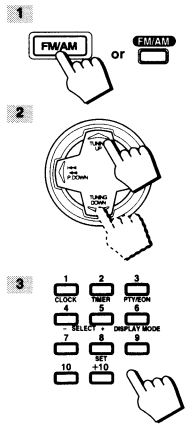

1. Select a band by pressing the FM/AM button.

2. Press the TUNING DOWN or TUNING UP on the MULTI CONTROL to tune into a station.

3. Press and hold the number keys on the Remote Control for a few seconds to set the preset number.

For preset numbers 1 to 10:
Press the number key for the preset number you want to set.
For preset numbers 11 to 20:
Press the 1 to 10 buttons after pressing the +10 button.
For preset numbers 21 to 30:
Press the 1 to 10 buttons after pressing the +10 button twice.

The preset number appears on the display after you have pressed the number keys. If you press and hold the button, the preset number display blinks. Release the button after the number starts to blink. This completes the preset setting.

4. Repeat steps 1 to 3 for each station you want to store in memory with a preset number.

CAUTION: If the Unit is unplugged or if a power failure occurs, the preset stations will be erased in a few days. If this happens, preset the station again.

Receiving FM Stations with RDS (CA-D352TR only)

RDS (Radio Data System) is a broadcasting service which a growing number of FM stations are now providing. It allows the FM stations to send additional signals along with their regular programme signals. For example, the stations send their station names and information about what type of programme they broadcast, such as sports or music, etc.
When tuned to an FM station which provides the RDS service, the station frequency (and then the station name if sent) is displayed.
One convenient RDS service is "Enhanced Other Networks (EON)". This allows the Unit to automatically switch to a programme type of your choice when one starts in your broadcast area.

■ Not all FM stations provide RDS service, nor do all RDS stations provide the same services. If in doubt, check with local radio stations for details on RDS services in your area.

Note: RDS may not work correctly if the station to which you are tuned is not transmitting properly or if the signal strength is weak.

What Information RDS can Provide

The System can use the following RDS service.

PS (Program Service name)
Identifies each station by a name.

TA (Traffic Announcement Identification)
Identifies that a traffic announcement is being broadcast in your area.

RT (Radio Text)
Allows the RDS station to send text messages that appear on the display of the unit.

PTY (Programme Type)
Identifies the type of RDS programme. This allows you to locate a specific type of programme being broadcast.

The programme types are as follows:

TRAFFIC:	Traffic announcement
NEWS:	News
AFFAIRS:	Topical programme expanding on current news or affairs
INFO:	Information
SPORT:	Sports events
EDUCATE:	Educational programmes
DRAMA:	Radio plays
CULTURE:	Programmes on national or regional culture
SCIENCE:	Programmes on natural sciences and technology
VARIED:	Other programmes like comedies or ceremonies
POP M:	Pop music
ROCK M:	Rock music
M.O.R. M:	Middle-of-the-road music (usually called "easy listening")
LIGHT M:	Light music
CLASSICS:	Classics
OTHER M:	Other music
NONE:	Undefined
ALARM:	Emergency broadcasts

EON (Enhanced Other Networks)
Provides information available on RDS stations other than the one which is being received.

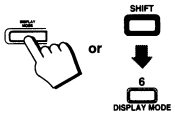

Changing the Display

You can see RDS information on the display.
To view RDS information on the display, press the DISPLAY MODE button. (When using the Remote Control, press the 6 DISPLAY MODE button after pressing the SHIFT button.)
Each time you press the button, the display changes to show the following information:

PS (Programme Service):
Station names will be displayed.

▼

PTY (Programme Type):
Types of broadcast programmes will be displayed.

▼

RT (Radio Text):
Text message sent by stations will be displayed.

▼

Station Frequency:
Station frequencies.

■ While RDS information is being received from a station, "PS", "PTY", or "RT" may appear on the display.

Searching for Programmes by PTY codes

One of the advantages of the RDS service is that you can locate a particular kind of programme by specifying the PTY codes.
■ The PTY Search function is applicable to preset stations only.

To search for a programme using the PTY codes, follow this procedure:

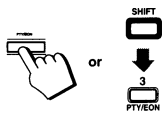

1. Press the PTY/EON button once.
- When using the Remote Control, press the 3 PTY/EON button after pressing the SHIFT button.

"PTY" and "SELECT" appear alternately on the display.

Note: If no adjustments are made for 10 seconds in PTY Select mode, the display reverts to the previous display. Perform the next step while "PTY" and "SELECT" are being displayed.

English

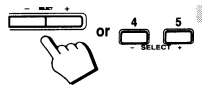

2. Press the SELECT + or SELECT – button to select a PTY.
- When using the Remote Control, press the 5 SELECT + or 4 SELECT – button.

The display changes with each pressing the button as shown below:

SELECT + →
↔ NEWS ↔ AFFAIRS ↔ INFO ↔ SPORT ↔ EDUCATE ↔ DRAMA ↔
CULTURE ↔ SCIENCE ↔ VARIED ↔ POP M ↔ ROCK M ↔ M.O.R. M ↔
LIGHT M ↔ CLASSICS ↔ OTHER M ↔ TRAFFIC ↔
← SELECT –

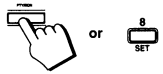

3. Press the PTY/EON button again.
- When using the Remote Control, press the 8 SET button.

While the search function is running, the selected programme type and "SEARCH" alternate on the display.

Once the station which is broadcasting the selected PTY (Programme Type) is located, searching will stop. Then the station name (if PS code is being sent) will be indicated and the broadcast will commence. The Display will stay blinking for 10 seconds from the end of the searching function. If you press the PTY/EON button again during this period, search for the same PTY (Programme Type) will restart.

■ If a station broadcasting a selected PTY(Program Type) cannot be found, "NOTFOUND" is displayed alternately on the display after the Unit has searched through the preset numbers. The Unit will return to the station to which it was tuned prior to the start of the PTY Search.

To cancel a PTY Search operation, press the PTY/EON button. (When using the Remote Control, press the 3 PTY/EON button.)

EON Function

With the EON (Enhanced Other Networks) code, the Unit can perform a standby reception which will enable you to obtain desired information which is available from other stations.

■ "EON" will be displayed while receiving stations with an EON code.
■ EON Standby reception is applicable for preset stations only.
■ You can set EON Standby reception regardless of types of receiving bands.

Setting EON Standby reception

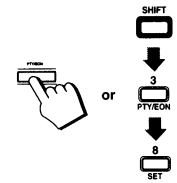

1. Press the PTY/EON button twice.
- When using the Remote Control, press the 3 PTY/EON button after pressing the SHIFT button then press the 8 SET button.

The last EON information type selected is displayed.

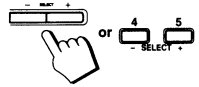

2. Select information you want by pressing the SELECT + or SELECT – button.
- When using the Remote Control, press the 5 SELECT + or 4 SELECT – button.

TA:	Identifies that a traffic announcement is being broadcast in your area.
NEWS:	News
INFO:	Programmes on medical service, weather forecast, etc.

- With each pressing of the button, indications will change as follows:

SELECT + →
↔ TA↔ NEWS ↔ INFO ↔ OFF ↔
← SELECT –

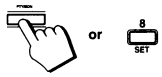

3. Press the PTY/EON button.
- When using the Remote Control, press the 8 SET button.

As soon as your selection is entered the Unit will go into EON Standby reception mode.

If you want to cancel the EON function, select "OFF" by following the steps above.

When this Unit carries out EON Standby reception, the indication will change as follows:

1. Waiting for EON Standby reception.

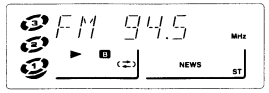

2. Preset stations are being searched for and while preparing to change the station, sound will be muted.

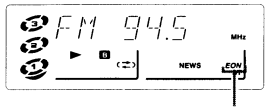

Light up

3. The station will be changed and the Station name being received will appear on the display.

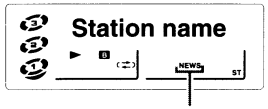

Blinking

- When using the DISPLAY MODE button to change the display, use the appropriate setting for the type of display.

Notes:

- EON broadcasts of some stations may not be compatible with this Unit. In the case of an incompatible EON broadcast, "EON" will not appear on the display.
- If the reception is unsatisfactory for a station among the preset stations, the station is searched for again. If after searching through the channels, the broadcasting station cannot be found, "NOTFOUND" is displayed alternately on the display. The Unit will return to the station to which it was previously tuned.

When broadcasting of the desired information has been completed, the Unit will automatically go back to the station which had previously been tuned to.

■ While receiving information on EON Standby reception, the station will not change to other stations even if the same information is available from them.

■ If the information you are waiting for is available from the current station, the indicator will blink.

ALARM function

If an ALARM (Emergency) signal is received while receiving an EON code from a station, the Unit automatically switches to the station broadcasting the ALARM signal.

English

English

Using the CD Player

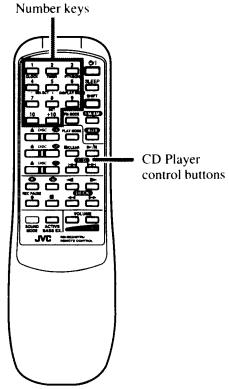

This illustration shows the Remote Control for CA-D352TR. The Remote Control for CA-D302T does not print the PTY/EON and DISPLAY MODE labels.

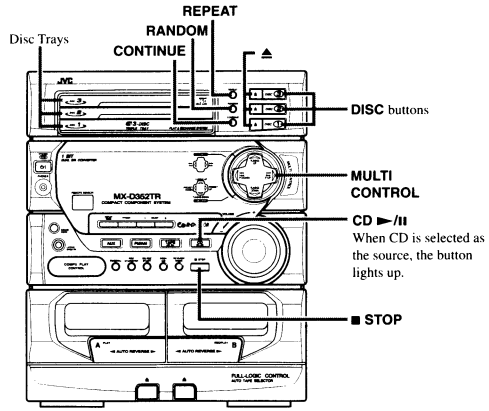

- This illustration is of CA-D352TR. CA-D302T does not have the DISPLAY MODE, PTY/EON, and SELECT –, + buttons.

Display

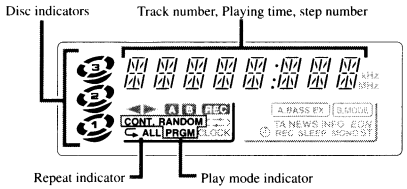

When the System is being used, the display shows other items as well. However, we have only shown the items described in this section.

Disc indicators

A disc marker lights up for the disc number you have selected. The disc indicator blinks while a CD is being played.
The disc indcator goes off when CD Player has detected that there is no disc in the disc tray.

The System's CD Player has an Automatic Changer with 3 disc trays. You can use Continuous, Random, Program or Repeat Play for the discs in DISC 1, DISC 2 and DISC 3. Repeat Play can repeat all the tracks on all the CD's or one track on one CD. There is also the Tray Lock function, which safely keeps discs in the trays.

Here are the basic things you need to know to play a CD and locate the different selections on it. Each selection is called a track, so when we are talking about locating a track, we are also talking about how you find a certain song or performance.

The Quickest Way to Start a CD Is with the One Touch Operation

■ Press the CD ► /II button (or the ►/II button on the Remote Control).

For Normal Play (Play mode indicator is not lit):

- If there is a CD in the disc tray for the selected disc number, the power is automatically turned on and the CD is played from the first track.
- If there is no CD in the disc tray for the selected disc number, the power is automatically turned on and "NO DISC" appears on the display. The CD Player is in stop mode.

For Continuous Play or Random Play in Display mode (CONT. or RANDOM indicators are lit):

- If there is a CD in the disc tray for the selected disc number, the power is automatically turned on and the CD is played continuously from the first track or the tracks are played in random order.
- If there is no CD in the disc tray for the selected disc number, the power is automatically turned on and other tray containing a CD is selected and is played continuously from the first track or the tracks are played in random order.
- If there are no CDs in CD player, the power is automatically turned on and "NO DISC" appears on the display in Normal Play mode. The CD Player is in stop mode.

■ Press a DISC button (1 to 3).

- If there is a CD in the disc tray for the selected disc number, the power is automatically turned on and playback starts from the selected CD.
- If there are no CDs in CD Player, the power is automatically turned on and "NO DISC" appears on the display in Normal Play mode. The CD Player is set to stop mode.

■ Press the ▲ button.

- The power turns on, and the tray opens automatically.

Loading Discs

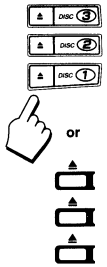

1. Press the ▲ button on the left of the Disc button you want to insert the disc into.

The disc tray slides out automatically.

2. Place a CD, with its label side up, onto the tray.

ATTENTION: *To avoid malfunctions when you play a CD, set the CD in the right place at the centre of the tray.*

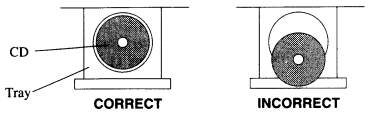

3. Press the ▲ button to close the tray.

4. Repeat steps 1 to 3 to insert other discs into other trays.

- To continue putting discs into other trays, even if a tray is open, by pressing the ▲ button of another disc tray, the open tray will close automatically, and the new disc tray will slide out.

■ To put an 8 cm CD into a tray, insert it so that it is aligned with the groove in the tray's centre.
■ If a tray is open when the System switches to Standby mode, the tray is closed automatically.
■ If the CD cannot be read correctly (due to scratches etc.), "00 00000" appears on the display.

Basics of Using the CD Player — Normal Play

Playing a Disc

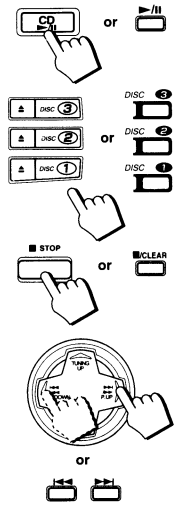

1. Prepare the discs.

2. Press the CD ►/II or DISC button (1-3) of the disc you want to play.

When using the Remote Control, press the ►/II button or the DISC button (1 to 3).
The first track of the selected disc will begin playing.
The CD Player automatically stops when the playback finishes the last track of the CD.

- If these buttons are pressed while the tray is open, the tray is automatically closed and playback starts.

To stop play the disc, press the ■ STOP button (or the ■/CLEAR button on the Remote Control).
To stop play and remove the disc, press the ▲ button for the disc being played.
To pause, press the CD ►/II button (or the ►/II button on the Remote Control). The playing time display will blink.
To cancel pause, press the CD ►/II button again (or press the ►/II button on the Remote Control). Play continues from the point where it was paused.

Selecting a Disc, Track or Passage Within a Track

1. Press the DISC button (1-3) for the disc tray containing the track you want to listen to.

- Example: for the third disc, press 3.

2. Press the |◄◄/◄◄ P. DOWN or ►►|/►► P. UP on the MULTI CONTROL to select the track.

When using the Remote Control, press the |◄◄ or ►►| button.
The selected track starts playing.
Each time you briefly press and release the |◄◄/◄◄ P. DOWN or ►►|/►► P. UP, the track changes by one.

- Press and release the ►►|/►► P. UP to go ahead one track at a time.
- Press and release the |◄◄/◄◄ P. DOWN to go back one track at a time.

Holding down the |◄◄/◄◄ P. DOWN or ►►|/►► P. UP button, during playback, will fast forward/backwards the CD so you can quickly find a particular passage in the selection you are listening to.

Locating a Track With the Remote Control Directly

Using the number keys on the Remote Control allows you to go directly to the beginning of any track.

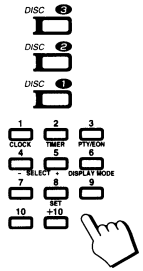

1. Press the DISC button (1-3) for the disc tray containing the track you want to listen to.

- Example: for the third disc, press 3.

2. Enter the number of the track you want to listen to with the number keys.

The selected track starts playing.

- Example: for track 5, press 5. For track 15, press +10 then 5. For track 20, press +10, then 10. For track 32, press +10 three times, then 2.

Changing Discs While Playing

You can replace a CD in a tray not being used, while another CD is playing.

1. Press the ▲ button of the tray not being used.

The tray opens.

2. Replace the disc in the tray.

3. Press the ▲ button to close the tray.

English

Continuous Play

This function plays the discs in the Unit continuously.

1. Prepare the discs.

2. Select Continuous mode.

On the Unit
Press the CONTINUE button.
The playback automatically starts from the selected CD.
- The CONT. indicator lights up.

You can press the CONTINUE button while a CD is playing to switch to Continuous mode.

On the Remote Control

1. Press the PLAY MODE button while the CD Player is stopped, to select "CONTINUE".
- The CONT. indicator lights up.
  Each time you press the button, CD play mode changes as follows:

→ **PROGRAM** → **RANDOM** → **CONTINUE** → No play mode display → (back to the beginning)

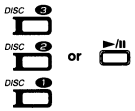

2. Press the DISC button (1 to 3) or ►/II button.
Playback starts from the selected CD.

Playing order of the CDs
The selected CDs are played continuously in the following order.
→ **DISC 1** → **DISC 2** → **DISC 3** → (back to the beginning)

To cancel Continuous play, press the CONTINUE button again. The CONT. indicator on the display goes out and Normal Play is resumed. When using the Remote Control, press the PLAY MODE button while the CD Player is stopped to select a different Play mode. The CONT. indicator goes out and the next Play mode is selected.

Programming the Playing Order of the Tracks

You can change the order in which the discs and tracks play, and select only the discs and tracks you want from among those loaded in the CD Player.
- You can program up to 20 steps in any desired order from among the discs in the CD player.
- You can only make a program when the CD Player is stopped.
- Use the Remote Control.

1. Press the PLAY MODE button to select "PROGRAM".
Each time you press the button, CD play mode changes as follows:

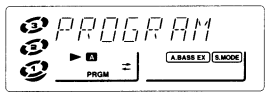

→ **PROGRAM** → **RANDOM** → **CONTINUE** →No play mode display → (back to the beginning)

- The PRGM indicator lights up.
- If a program is already in progress, the last step of the program is displayed.

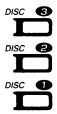

2. Select a disc with the DISC buttons (1 to 3).
The display changes to the Program Entry display.

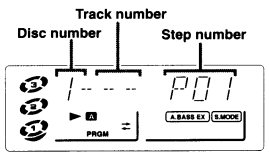

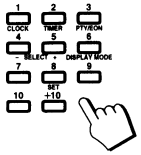

3. Press the number keys (1 to 10 and +10) to select the track to program.
- Example: for track 5, press 5. For track 15, press +10 then 5. For track 20, press +10 then 10.

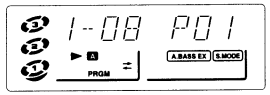

4. Repeat steps 1 to 3 to select the other tracks for the program.

5. Press the ►/II button.
The Unit plays the tracks in the order you have programmed them.

- If you try to program a disc tray that is empty, or a track number that does not exist on a disc (for example, selecting track 14 on a disc that only has 12 tracks), the selected disc or track are skipped when the program is played.
- You can skip to a particular program step by pressing the MULTI CONTROL (|◄◄/◄◄ P. DOWN or ►►|/►► P. UP) or the |◄◄ or ►►| button on the Remote Control during program play.
- To play the programmed tracks over and over, press the REPEAT button . The Repeat mode indicators light up in sequence with each press of the REPEAT button.

To stop playing, press the ■ STOP button (or the ■/CLEAR button on the Remote Control) once.
To delete all the tracks in a program, press the ■ STOP button on the Unit or the ■/CLEAR button on the Remote Control while the CD Player is stopped. The program is deleted and the PRGM indicator goes out and Normal Play is resumed.
To cancel program play, press the PLAY MODE button on the Remote Control while the CD Player is stopped to select a different Play mode. The PRGM indicator goes out and the next Play mode is selected.

Note: If you press the CONTINUE or RANDOM button on the Unit while a program is playing, the play mode changes to that mode.

Random Play

The tracks will play in no special order when you use this mode.

On the Unit
Press the RANDOM button.
The playback automatically starts from the selected CD.
- RANDOM on the Play mode indicator lights up.

You can press the RANDOM button while a CD is playing to switch to Random play mode.

On the Remote Control

1. Press the PLAY MODE button while the CD Player is stopped, to select "RANDOM".
- The RANDOM indicator lights up.
  Each time you press the button, CD play mode changes as follows:

→ **PROGRAM** → **RANDOM** → **CONTINUE** → No play mode display → (back to the beginning)

2. Press the ►/II button.
Playback starts from the selected CD.

Note: Random Play cannot be activated with the DISC button (1 to 3) and the number keys.

To skip to the next track, press the ►►|/►► P. UP on the MULTI CONTROL (or the ►►| button on the Remote Control) during playback. Each time you press the button, the next track is jumped to. Press the |◄◄/◄◄ P. DOWN on the MULTI CONTROL (or the |◄◄ button on the Remote Control) to jump to the start of the track being played.

- Press the REPEAT button before or during random play to instruct the System to continue with a different random track selection after the last selection is played.

To cancel random play, press the RANDOM button again. The RANDOM indicator goes out and Normal Play is resumed. When using the Remote Control, press the PLAY MODE button while the CD Player is stopped to select a different Play mode. The RANDOM indicator goes off and the next Play mode is selected.

Repeating a Selection or the Discs

You can have all the discs, the program or the individual selection currently playing repeat as many times as you like.

Press the REPEAT button.
Each time you press the button, the Repeat Modes changes as follows.

→ ⟲ → ⟲ ALL → No indication → (back to the beginning)

⟲ : Repeats one track on a CD.
⟲ ALL: For Normal Play, repeats all the tracks on the current CD.
For Continuous Play or Random Play, repeats all the tracks on all the CDs in the CD Player.
For Program Play, repeats all the tracks in the program.

To exit Repeat Mode, press the REPEAT button until the Repeat mode indicator on the display goes off.

Tray Lock Function

In order to safely keep the discs in the CD Player, the three trays can be electronically locked in a single operation.
When the electronic lock is on, the trays cannot be opened even if the ⏏ button is pressed.
This function can only be accessed by using the buttons on the Unit itself.

Locking the Trays

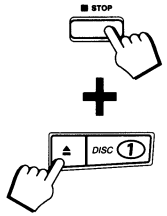

1. Put the System's power into STANDBY mode.

2. While pressing the ■ STOP button, press the ⏏ button for DISC 1's tray on the Unit.
"LOCK ON" appears on the display to let you know that the trays have been locked.

LOCK ON

When the CD Player trays are locked, pressing the ⏏ buttons displays the message "LOCK ON" on the display and the trays do not open. Also, the ⏏ button cannot be used to automatically turn on the power.

Unlocking the Trays

1. Put the System's power into STANDBY mode.

2. While pressing the ■ STOP button, press the ⏏ button for DISC 1's tray on the Unit.
When the unlock operation is done, "LOCK OFF" appears on the display to show that the lock has been taken off.

LOCK OFF

The trays can now be opened by pressing the ⏏ buttons.
The ⏏ button can also be used to automatically turn on the power.

English

English

Using the Cassette Deck
(Listening to a Tape)

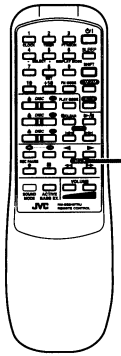

Cassette Deck control buttons

This illustration shows the Remote Control for CA-D352TR. The Remote Control for CA-D302T does not print the PTY/EON and DISPLAY MODE labels.

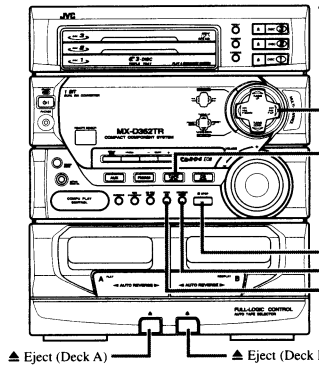

• This illustration is of CA-D352TR. CA-D302T does not have the DISPLAY MODE, PTY/EON, and SELECT –, + buttons.

Display

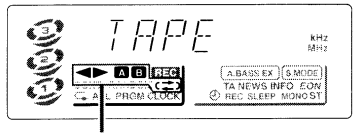

◄► : Tape Direction indicator
A B : DECK A, B indicator
⟲ : Reverse Mode indicator

Tape Direction Indicator on the Display
The Tape Direction indicator tells you which direction the selected tape deck will use for playback.
During playback, the direction indicator blinks slowly.
During fast left or fast right, the indicator blinks quickly.
During Music Scan mode, the direction indicator alternates between blinking slowly and quickly repeatedly.

When the System is being used, the display shows other items as well. However, we have only shown the items described in this section.

The Cassette Deck allows you to play, record and dub audio tapes.
■ With Automatic Tape Detection, you can listen to Type I or II tapes without changing any settings.

> The use of tapes longer than 120 minutes is not recommended, since characteristic deterioration may occur and these tapes easily jam in the pinch-rollers and the capstans.

One Touch Play

COMPU PLAY

By pressing the TAPE ◄ ► button (or the ◄ or ► button on the Remote Control), the Unit will turn on, "TAPE" appears on the display, and if a tape is in the deck, it will start to play. If no tape is loaded, the Unit will turn on and wait for you to insert a tape, or select another function.

Regular Play

When the power is already on, you can use this basic procedure:

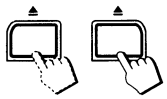

1. Press the ⏏ button for the deck you want to use.

2. When the cassette holder opens, put a cassette in, with the exposed part of the tape down, toward the base of the System.
• If the cassette holder does not open, turn the power off, then back on and press the ⏏ button again.

3. Close the holder gently.
When both Deck A and Deck B contain a tape, the last deck to have a tape inserted is selected.
To change the selected deck, press the DECK A/B button. When using the Remote Control, press the A or B button.

4. Press the TAPE ◄ ► button (or ◄ or ► button on the Remote Control).
On the Unit: The tape play starts toward the direction currently selected.
On the Remote Control: The tape play starts toward the same direction as the button is pressed for.
- The Cassette Deck automatically stops when one side of a tape has finished playing.

To stop playing, press the ■ STOP button on the Unit (or the ■ button on the Remote Control).
To remove the tape, stop the tape, and press the ⏏ button.
To change deck while playing a tape, press the TAPE ◄ ► button after pressing the DECK A/B button on the Unit or press the ◄ or ► button after pressing the A or B button on the Remote Control.

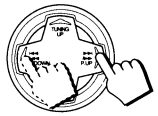

Fast Left And Fast Right

■ While the tape is stopped, press the ⏮/◄◄ P. DOWN on the MULTI CONTROL (or ◄◄ button on the Remote Control) and the tape will wind rapidly to the left side of the cassette without playing.
■ While the tape is stopped, press the ►►I/►► P. UP on the MULTI CONTROL (or ►► button on the Remote Control) and the tape will wind rapidly to the right side of the cassette without playing.

Note: Deck A and Deck B cannot be used for playback at the same time.

Music Scan

To find the beginning of a music track during play, use the Music Scan function. Music Scan searches for blank portions that usually separate selections, then plays the next selection.

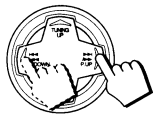

Finding the Beginning of the Current Selection

Press the ⏮/◄◄ P. DOWN or ►►I/►► P. UP on the MULTI CONTROL (or the ◄◄ or ►► button on the Remote Control) during play.
■ Make sure that you press the ⏮/◄◄ P. DOWN or ►►I/►► P. UP on the MULTI CONTROL (or the ◄◄ or ►► button on the Remote Control) in the opposite direction to that in which the tape is playing. Searching stops at the beginning of the current selection, and the current selection starts automatically.

Finding the Beginning of the Next Selection

Press the ⏮/◄◄ P. DOWN or ►►I/►► P. UP on the MULTI CONTROL (or the ◄◄ or ►► button on the Remote Control) during play.
■ Make sure that you press the ⏮/◄◄ P. DOWN or ►►I/►► P. UP on the MULTI CONTROL (or the ◄◄ or ►► button on the Remote Control) in the same direction as that in which the tape is playing. Searching stops at the beginning of the next selection, and the next selection starts automatically.

Music Scan works by detecting a 4-second long blank at the beginning of each selection, so it will not work well if your tape has:
- No blank at the beginning of a selection .
- Noise (often caused by much use or poor quality dubbing) which fills the blank with noise.
- Long, very soft passages or pauses in a selection. The scan will detect these as 4-second long blanks. If this happens, just scan again until you reach the selection you want.

Reverse Mode

You can play both sides of a cassette, or play both the tapes in the two Cassette Decks continuously.

Press the REVERSE MODE button to switch to Reverse Mode.
Each time you press the button, the Reverse Mode changes as follows:
→ ⇄ → ⇄) (auto reverse mode) → (⇄) (auto reverse mode) → (back to the beginning)

⇄ : The Cassette Deck automatically stops after playing one side of the tape.
⇄) : The Cassette Deck automatically stops after playing reverse (◄) side of the tape being played (or set to play).
(⇄) : After playing both sides of the tape being played (or set to play), the Unit always checks to see if a tape is in the other deck. If there is, it automatically starts playing that tape. This Continuous Play function works regardless of which deck starts first. The tapes are played continuously until the ■ STOP button on the Unit (or the ■ button on the Remote Control) is pressed.

English

English

Using the Cassette Deck (Recording)

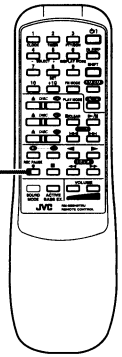

This illustration shows the Remote Control for CA-D352TR. The Remote Control for CA-D302T does not print the PTY/EON and DISPLAY MODE labels.

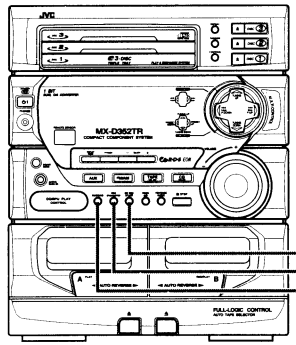

- This illustration is of CA-D352TR. CA-D302T does not have the DISPLAY MODE, PTY/EON, and SELECT –, + buttons.

Display

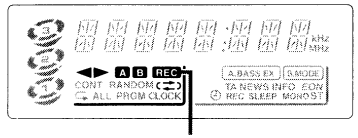

REC indicator

When the System is being used, the display shows other items as well.
However, we have only shown the items described in this section.

Things to Know before You Start Recording

■ **It may be unlawful to record or play back copyrighted material without the consent of the copyright owner.**
■ When you want to record onto both sides of a tape, you can set the auto reverse mode on to do so. However, recording automatically stops after recording in the ◄ direction in the auto reverse mode. Therefore, make sure that the tape direction is ► when recording with the auto reverse mode on.
■ The recording level, which is the volume at which the new tape is being made, is automatically set correctly, so it is not affected by the VOLUME control on the System. Thus, during recording you can adjust the sound you are actually listening to without affecting the recording level.

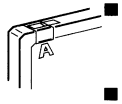

■ Two small tabs on the back of the cassette tape, one for side A and one for side B, can be removed to prevent accidental erasure or re-recording. To record on a cassette with the tabs removed, you must cover the holes with adhesive tape first.
However, when a Type II tape is used, only cover part of the hole as shown, since the other part of the hole is used to detect the tape type.
■ When recording, you can hear Sound Mode effects through the speakers or headphones. However, the sound is recorded without Sound Mode effects.
■ Type I and Type II tapes can be used for recording.

Note: At the start and end of cassette tapes, there is leader tape which cannot be recorded onto. Depending on the recording source, the first part of the recording may be missing because of the leader. When recording CDs or radio broadcasts, to get the beginning of the recording on the tape, first wind on the leader before beginning recording.

CAUTION: If recordings you have made have excessive noise or static, the Unit may be too close to a TV which was on during the recording. Either turn off the TV or increase the distance between the TV and the System.

English

Standard Recording

This is the basic method for recording any source. The System also has special ways for recording CD to tape, and tape to tape, which save you time and effort, as well as give you some special effects. However, when you need to add a selection to a tape you have made, or are combining selections from several sources on one tape, use the method described below; just substitute the source you want into this procedure, such as a CD or the Tuner. You can also record from auxiliary source with this procedure.

Using the Unit

1. Insert a blank or erasable tape into Deck B.

2. Press the REVERSE MODE button if you want to record on both sides of the tape.
Press the button until the "⇄" or "⟲⇄" indicator is lit.
- When using the auto reverse mode, insert the tape so that it will be recorded in the forward (►) direction.

3. Check the recording direction for the tape.
Check that the Tape Direction indicator is the same as that for the tape in the tape deck. If the directions are different, press the ■ STOP button after pressing the TAPE ◄ ► button to set the tape direction.
- When using the auto reverse mode to record both sides of a tape, check that the Tape Direction indicator is in the forward (►) direction. If the direction indicator is not in the forward (►) direction, press the TAPE ◄ ► button then press the ■ STOP button.

4. Prepare the source, for example, by tuning in a radio station, loading CDs, or turning on connected equipment.

5. Press the REC START/STOP button.
The REC indicator lights up and the System begins recording.

Using the Remote Control

1. Insert a blank or erasable tape into Deck B.

2. Press the REVERSE MODE button on the Unit if you want to record on both sides of the tape.
Press the button until the "⇄" or "⟲⇄" indicator is lit.
- When using the auto reverse mode, insert the tape so that it will be recorded in the forward (►) direction.

3. Prepare the source, for example, by tuning in a radio station, loading CDs, or turning on connected equipment.

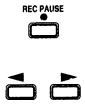

4. Press the REC PAUSE ● button.
The REC indicator blinks.

5. Press the ◄ or ► button.
Recording starts in the direction of the button pressed.
The REC indicator stops blinking and remains lit.
- When using the auto reverse mode to record both sides of a tape, press the ► button.

Notes for using Reverse Mode for recording

When recording in Reverse Mode, the System automatically stops when it reaches the end of the reverse (◄) direction. To record on both sides of a tape, make sure that the recording direction for the tape inserted into Deck B is forward (►), and that the Tape Direction indicator is also forward (►), before you start recording.

To Pause at Any Time During the Recording Process

Press the REC PAUSE ● button on the Remote Control. Then press either the ◄ or ► button on the Remote Control or REC START/STOP button on the Unit to restart recording.

To Stop at Any Time During the Recording Process

Press the REC START/STOP button on the Unit again, or press the ■ STOP button on the Unit (or ■ button on the Remote Control).

English

Recording AM Station to Tape

When recording an AM broadcast, beats may be produced which are not heard when listening to the broadcast. In this case, press the CONTINUE button on the CD Player to eliminate the beats.

1. Set to AM station and start recording.

2. Press the CONTINUE button repeatedly until the beats are eliminated.
Each time you press the button, the display changes as follows:
→ **CUT 2** → **CUT 3** → **CUT 4** → **CUT 1** → (back to the beginning)

CD Direct Recording

Everything on the CD goes onto the tape in the order it is on the CD, or according to the order you have set in a program.

1. Press the CD ►/II button, then the ■ STOP button.

2. Prepare CDs. (See page 17.)
Check that source is the CD Player and be not playing a CD.

3. Insert a cassette in Deck B to record on.
- When you want to record on both sides of a tape, press the REVERSE MODE button to turn on the auto reverse mode. Check that the recording direction for the tape and the Tape Direction indicator are correct. (See page 25 "Notes for using Reverse Mode for recording".)

4. Press the CD REC START button.
The REC indicator lights up and the System begins recording.
If you make a recording with the auto reverse mode on, the Unit will record the last song at the end of the first side at the beginning of the next side.

To stop at any time during the recording process, press the ■ STOP button.

Note: When making Sleep Timer settings while doing CD Direct recording, set the time so that there is enough leeway to finish the recording before the power goes off. If the time is set to about the length of the CD, the power may go off before recording finishes.

> For CD Direct Recording using more than one disc, use a blank tape. If you use a prerecorded tape, prerecorded material may not be erased between newly-recorded tracks.

Tape to Tape Recording (Dubbing)

Recording from one tape to another is called dubbing.
You can dub tapes simply, with just a single button.
- ■ When dubbing tapes, make sure that the playback direction of Deck A and Deck B are the same.
- ■ When you record both sides of a tape, press the REVERSE MODE button to turn on the auto reverse mode.
- ■ It is preferable that the type of tape (Type I or Type II) you record from be the same as the type you record onto.

How to Use the DUBBING Button

1. Press the TAPE ◄ ► button, then the ■ STOP button.

2. Insert the source cassette you want to copy from into Deck A for playback.
Insert the cassette so that it will be played in the forward (►) direction.

3. Insert the blank or erasable cassette you want to copy onto into Deck B for recording.
Insert the cassette so that it will be recorded in the forward (►) direction.

4. Press the DUBBING button.
Deck A and Deck B will start simultaneously.

To stop dubbing, press the ■ STOP button.

- ■ When dubbing with the DUBBING button, you can hear Sound Mode effects through the speakers or headphones. However, the sound is dubbed without Sound Mode effects.

Using the Timer

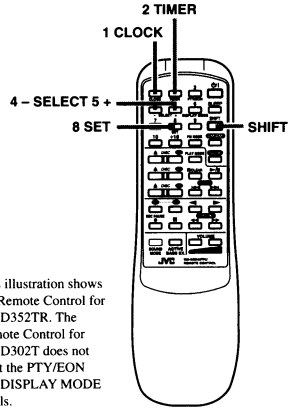

This illustration shows the Remote Control for CA-D352TR. The Remote Control for CA-D302T does not print the PTY/EON and DISPLAY MODE labels.

Display

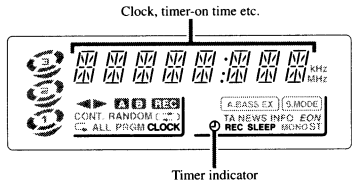

When the System is being used, the display shows other items as well. However, we have only shown the items described in this section.

The timers let you control listening and recording functions automatically.
Use the Remote Control to set the clock and timers.

Setting the Clock

The timers depend on the clock: the clock must be right for the timers to work as you expect.
You can set the clock whether the Unit is on or off.
Note that the clock must be set, otherwise the timers cannot be set.

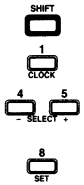

1. Press the SHIFT button.

2. Press the 1 CLOCK button.
The CLOCK indicator on the display lights up and the clock time blinks.

3. Press the SELECT 5 + or 4 – button to set the time.
Pressing the 5 + button increases the time and pressing 4 – decreases the time. Pressing the button continuously advances or decreases the time in 10 minute intervals.

4. Press the 8 SET button.
The clock stops blinking, and the clock timer starts from 0 seconds.

CAUTION: If there is a power failure, the clock loses its setting. The display shows "0:00", and the clock must be reset.

English

English

Setting the Timer

■ You can set the Timer whether the Unit is on or off.

Procedure For Setting the Timer

1. Press the SHIFT button.

2. Press the 2 TIMER button.
The Timer indicator on the display lights up and the blinking "TIMER ON" changes to the On Time setting display.

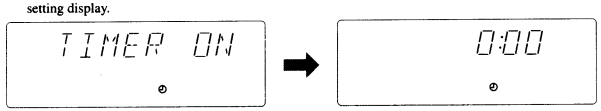

3. Set the time you want the Unit to come on.
Press the SELECT 5 + or 4 – button to set the On-Time.

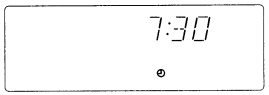

4. Press the 8 SET button.
"TIMER OFF" blinks on the display, and the display changes to the Off-Time setting display.

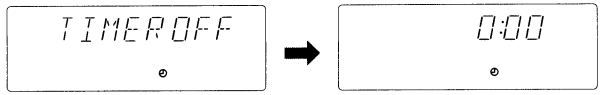

5. Set the time you want the Unit to be turned off.
Press the SELECT 5 + or 4 – button to set the Off-Time.

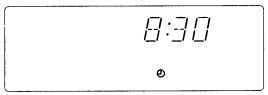

6. Press the 8 SET button.
The name of the source blinks in the display.

7. Press the SELECT 5 + or 4 – button to select the source.
Each time you press the button, the source changes as follows:

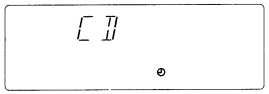

↔ TUNER ↔ TUNER REC ↔ CD ↔ TAPE ↔

TUNER:	Selects the last station you were listening to.
TUNER REC:	Records the last station you were listening to.
CD:	Plays the last CD you were listening to.
TAPE:	Plays the last tape you were listening to.

- In the source "TUNER", "CD", or "TAPE", the timer acts as a Daily timer. Once the Daily timer has been set, it will be activated at the same time every day until the setting is turned off.
  In the source "TUNER REC", the timer acts as a Once timer. After the Once timer has been performed, the details of the setting remain stored but the Timer status is set to off.

8. Press the 8 SET button.
The volume level blinks on the display.

9. Press the SELECT 5 + or 4 – button to set the volume level.

10. Press the 8 SET button.
The display returns to the display before you set the timer.

Before Turning the Unit Off

- Check that the selected source is ready.
- If you will be recording a source while you are out, set the volume to 0.

To turn the Timer off, press the 2 TIMER button after pressing the SHIFT button. The Timer indicator on the display goes off.

Setting the Sleep Timer

Use the Sleep Timer to turn the Unit off after a certain number of minutes when it is playing. By setting this timer, you can fall asleep to music and know your Unit will turn off by itself rather than play all night.

- You can only set the Sleep Timer when the Unit is on and a source is playing.

To set the Sleep Timer, follow this procedure:

1. With the System on and a source playing, press the SLEEP button on the Remote Control.

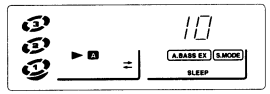

2. Set the length of time you want the source to play before shutting off.

- Each time you press this button,the number of minutes shown on the display changes as follows:

→ 10 → 20 → 30 → 60 → 90 → 120 → Cancelled → (back to the beginning)

When the number of minutes you want are shown on the display, just wait 5 seconds until the number of minutes stops blinking and remains lit.
The Unit is now set to turn off after the number of minutes you set.

To Change the Sleep Timer Setting

Press the SLEEP button until the number of minutes you want appears on the display.

To Cancel the Sleep Timer Setting

Press the SLEEP button until the SLEEP indicator goes off on the display.
Turning off the Unit also cancels the Sleep Timer.

English

English

Care And Maintenance

Compact Discs

Handle your compact discs, cassette tapes, and Cassette Deck carefully, and they will last a long time.

- Remove the CD from the case by holding it at the edges while pressing the centre hole lightly.
- Do not touch the shiny surface of the CD, or bend the CD.

- Put the CD back in its case after use to prevent warping.
- Be careful not to scratch the surface of the CD when placing it back in the case.
- Avoid exposure to direct sunlight, temperature extremes, and moisture.

- A dirty CD may not play correctly. If a CD does become dirty, wipe it with a soft cloth in a straight line from centre to edge.

CAUTION: Do not use any solvent (for example, conventional record cleaner, spray thinner, benzine, etc.) to clean a CD.

Moisture Condensation

Moisture may condense on the lens inside the Unit in the following cases:

- After starting the heating in the room.
- In a damp room.
- If the Unit is brought directly from a cold to a warm place.

Should this occur, the Unit may malfunction. In this case, leave the Unit turned on for a few hours until the moisture evaporates, unplug the AC power cord, and then plug it in again.

General Notes

In general, you will have the best performance by keeping your tapes, CDs, and the mechanism clean.

- Store tapes and CDs in their cases, and keep them in cabinets or on shelves.
- Keep the Cassette Deck's tape doors and the CD trays closed when not in use.

Cassette Tapes

- If the tape is loose in its cassette, take up the slack by inserting a pencil in one of the reels and rotating.
- If the tape is loose, it may get stretched, cut, or caught in the cassette.

- Do not touch the tape surface.

- Do not store the tape:
  - In dusty places
  - In direct sunlight or heat
  - In moist areas
  - On a TV or speaker
  - Near a magnet

Cassette Deck

- If the heads, capstans, and pinch-rollers of the Cassette Deck become dirty, the following will occur:
  - Loss of sound quality
  - Discontinuous sound
  - Fading
  - Incomplete erasure
  - Difficulty recording
- Clean the heads, capstans, and pinch-rollers using a cotton swab moistened with alcohol.

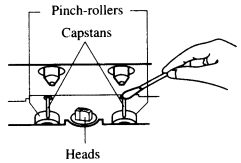

- If the heads become magnetized, the Unit will produce noise or lose high frequencies.
- To demagnetize the heads, turn off the Unit, and use a head demagnetizer (available at electronics and record shops).

Troubleshooting

- If you are having a problem with your System, check this list for a possible solution before calling for service.
- If you cannot solve the problem from the hints given here, or the Unit has been physically damaged, call a qualified person, such as your dealer, for service.

Symptom	Possible Cause	Action
No sound is heard.	Connections are incorrect, or loose.	Check all connections and make corrections. (See pages 4 - 5.)
Unable to record.	Cassette record protect tabs are removed.	Cover holes on back edge of cassette with tape.
Poor radio reception	• The antenna is disconnected. • The AM Loop Antenna is too close to the Unit. • The FM Wire Antenna is not properly extended and positioned.	• Reconnect the antenna securely. • Change the position and direction of the AM Loop Antenna. • Extend FM Wire Antenna to the best reception position.
The CD skips.	The CD is dirty or scratched.	Clean or replace the CD.
Unable to operate the Remote Control.	• The path between the Remote Control and the sensor on the Unit is blocked. • The batteries have lost their charge.	• Remove the obstruction. • Replace the batteries.
The CD tray cannot be opened.	The main AC power cord is not plugged in.	Plug in the AC power plug.
The CD does not play.	The CD is upside down.	Put the CD in with the label side up.
Operations are disabled.	The built-in microprocessor has malfunctioned due to external electrical interference.	Unplug the Unit then plug it back in.
The cassette door cannot be opened.	During tape playing, the power cord was unplugged.	Plug in the power cord, press the ⏻/I button, and then press the ⏏ button.

English

English

Specifications

Amplifier

Output Power (IEC 268-3/DIN)	27 watts per channel, min. RMS, both channels driven into 6 ohms at 1 kHz with no more than 0.9% total harmonic distortion.
Input Sensitivity/Impedance (1 kHz)	
AUX	300 mV/50 kohms
Speaker terminals	6 - 16 ohms

Cassette Deck

Frequency Response	
Type II (CrO_2) :	50 - 14,000 Hz
Type I (NORMAL) :	50 - 14,000 Hz
Wow And Flutter	0.15% (WRMS)

CD Automatic Changer

CD Capacity	3 discs
Dynamic Range	85 dB
Signal-To-Noise Ratio	90 dB
Wow And Flutter	Unmeasurable

Tuner

FM Tuner	
Tuning Range	87.5 - 108.0 MHz
AM Tuner	
Tuning Range	
MW	522 - 1,629 kHz
LW	144 - 288 kHz
Dimensions	265 × 315 × 340 mm (W/H/D) (10-7/16 × 12-7/16 × 13-7/16 inches)
Mass	7.2 kg (15.9 lbs)

Accessories

AM (MW/LW) Loop Antenna (1)
Remote Control (1)
Batteries R6P (SUM-3)/AA (15F) (2)
FM Wire Antenna (1)

Power Specifications

Power Requirements	AC 230 V ∿, 50 Hz
Power Consumption	85 watts 7 watts (in standby mode)

Design and specifications are subject to change without notice.

JVC

VICTOR COMPANY OF JAPAN, LIMITED

EN, GE, FR, NL, SP, IT

0298TNMNATJEM

CA-D352TR

<<MEMO>>

PARTS LIST

[MX-D352TR]

UNIT No.CA-D352TR
SP-D352

* All printed circuit boards and its assemblies are not available as service parts.

Area Suffix

B ---------- U.K
E --------- Continental Europe
EN ------ North Europe

- Contents -

General Exploded View and Parts List ---------- 2-3
CD Mechanism Ass'y and parts list ---------- 2-5
Chenger Mechanism Ass'y and Parts list ---------- 2-6
Chassette Mechanism Ass'y and Parts list ---------- 2-8
Electrical Parts List ---------- 2-10
(Power Supply & Amplifier) ---------- 2-10
(Pre Amplifier & Tuner) ---------- 2-12
(System Micon & Operatio Switch) ---------- 2-15
(CD Servo Control) ---------- 2-18
(CD Select Switch) ---------- 2-19
(Chenger Control) ---------- 2-19
(Head Amplifier & Mechanism Control) ---------- 2-20
(Reel Pulse) ---------- 2-22
(Reel Pulse) ---------- 2-22
Accessories and Packing Materials and Parts List ---------- 2-23

■ General Exploded View and Parts List

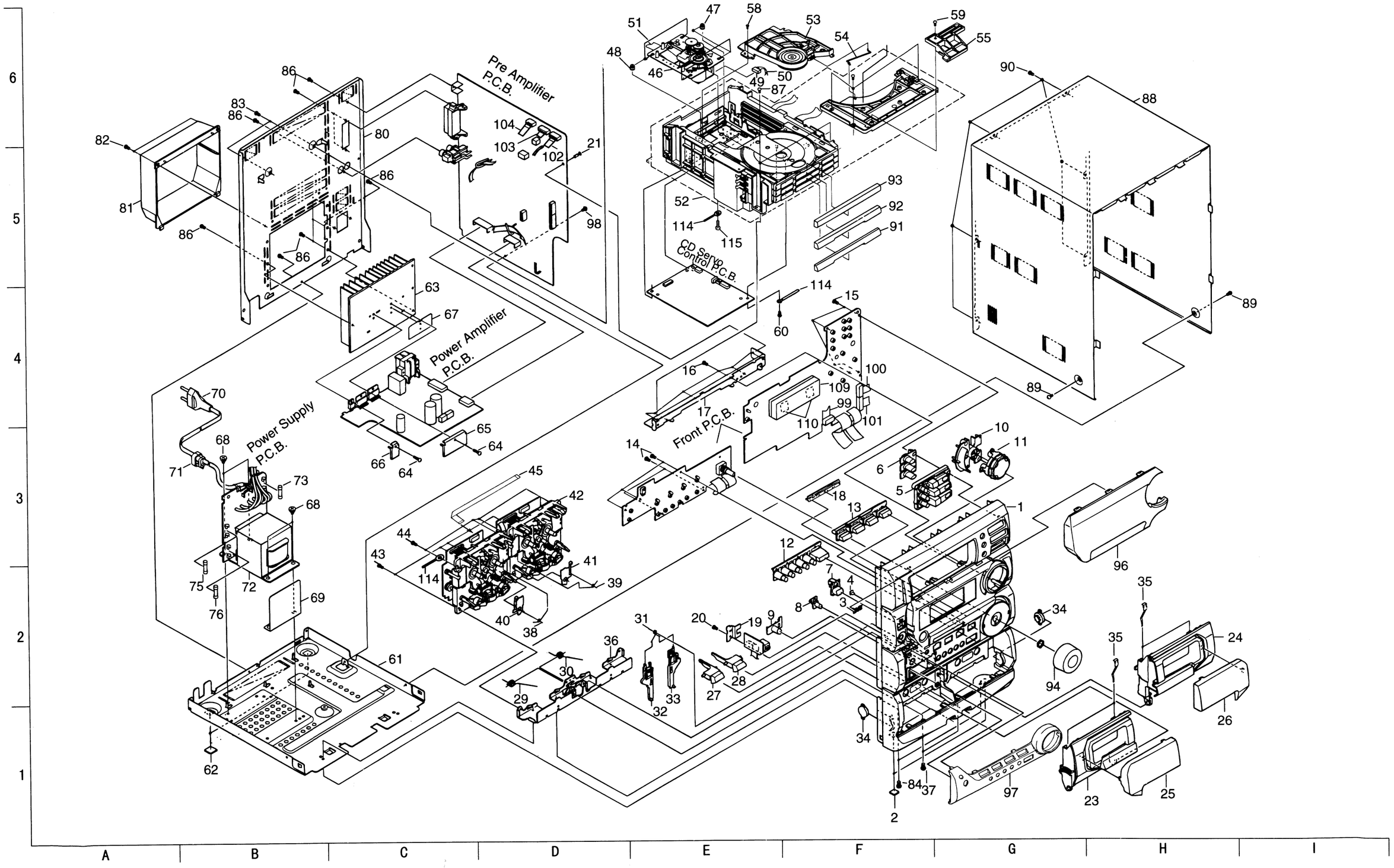

BLOCK NO. M1MM

⚠	REF.	PARTS NO.	PARTS NAME	REMARKS	QTY	SUFFIX	CLR
	1	GV10001-002AKP	FRONT PANEL		1		
	2	E75896-001	SPACER		2		
	3	E406971-001SM	JVC MARK		1		
	4	GV40003-001AKP	STBY.INDICATOR		1		
	5	GV20009-001AKP	CD BUTTON		1		
	6	GV30008-001AKP	DISC BUTTON	ATTACH TO CD BT	1		
	7	GV30010-002AKP	POWER BUTTON	ON/STANDBY MARK	1		
	8	GV30016-001AKP	PUSH BUTTON		1		
	9	GV30017-001AKP	PUSH BUTTON		1		
	10	GV20008-004BKP	SOUND BUTTON		1		
	11	GV30018-001BKP	SERCH BTN.ASSY		1		
	12	GV30009-001AKP	CONTROL BUTTON		1		
	13	GV30013-001AKP	SOURCE BUTTON		1		
	14	SDSF2608Z	SCREW	SWITCH BOARD	5		
	15	SDSF2608Z	SCREW	MICOM BOARD	4		
	16	SDSF2608Z	SCREW	STY.BKT+F.PANEL	6		
	17	GV30003-001AKP	STAY BRACKET		1		
	18	GV30012-001AKP	RDS BUTTON		1		
	19	GV40001-001AKP	H.P BRACKET		1		
	20	SDSF2608Z	SCREW	H.P BKT.+F.PANE	1		
	21	FMYH4004-001	PLASTIC RIVET	MAIN BOARD&BKT.	1		
	23	GV20001-004AKP	CASS HOLDER (L)		1		
	24	GV20002-004AKP	CASS HOLDER (R)		1		
	25	GV20003-001AKP	CASS LENS (L)		1		
	26	GV20004-001AKP	CASS LENS (R)		1		
	27	GV30014-004AKP	EJECT BUTTON(A)		1		
	28	GV30015-004AKP	EJECT BUTTON(B)		1		
	29	FMKW4009-001	HOLDER SPRING A	FOR CASS.HOLDER	1		
	30	FMKW4010-001	HOLDER SPRING B	FOR CASS.HOLDER	1		
	31	FMKW4011-001	SPRING	FOR EJECT LEVER	1		
	32	FMKS3002-002KP	EJECT LEVER (A)		1		
	33	FMKS3003-002KP	EJECT LEVER (B)		1		
	34	VYH7779-00B	DUMPER ASS'Y		2		
	35	VKY4180-001	CASSETTE SPRING		4		
	36	FMKL2002-001	HOLDER BRACKET		1		
	37	SBSG3010Z	T.SCREW	F.P.TO H.BRKT.	2		
	38	FMKW4007-001	SPRING (A)	EJECT SAFETY A	1		
	39	FMKW4008-001	SPRING (B)	EJECT SAFETY B	1		
	40	FMKL4012-003	EJECT SAFETY(A)		1		
	41	FMKL4013-001	EJECT SAFETY(B)		1		
	42	----------	CASSETTE MECHA		1		
	43	SBSG3010Z	T.SCREW	MECHA & H.BRKT.	4		
	44	SBSF3010Z	SCREW	MECHA & F.PANEL	4		
	45	VWF1210-25TTB	CARD WIRE		1		
	46	----------	CD MECHA		1		
	47	FMYH4003-002	INSULATOR		2		
	48	FMYH4003-001	INSULATOR		2		
	49	VDM1001-M001A	WIRE&TUBE		1		
	50	VYSA1R2-033	SPACER		1		
	51	QUQ110-1509AJ	FLAT WIRE		1		
	52	----------	CHANGER MECHA		1		
	53	VKS3703-00FMM	CLAMPER ASS'Y		1		
	54	VKW5187-001	ROD		1		
	55	E309662-001	DISC STOPPER		1		
	58	SPST2606Z	SCREW	FOR CLAMPER ASS	1		

BLOCK NO. M1MM

⚠	REF.	PARTS NO.	PARTS NAME	REMARKS	QTY	SUFFIX	CLR
	59	SBSF3008Z	SCREW	FOR DISC STOPPE	1		
	60	SBSF3008Z	SCREW	C3 BOARD& CASIN	1		
	61	GV10003-001AKP	CHASSIS BASE		1		
	62	E75896-006	FELT SPACER	CHAS.BASE FOOT	2		
	63	GV30007-001AKP	HEAT SINK		1		
	64	SBSG3014CC	T.SCREW		2		
	65	FMKL4007-001	BRACKET	FOR POWER IC	1		
	66	FMKL4015-001	BRACKET		1		
	67	FMPK4003-001	MICA SHEET		1		
	68	E65389-002	SPECIAL SCREW		4		
	69	FMMA4003-001	TRANS.SHIELD		1		
	70	QMPN090-200-JC	POWER CORD		1	B	
		QMP39E0-200	POWER CORD		1	E,EN	
	71	QHS3771-108	CORD STOPPER		1		
	72	FMTP66M8-65A	POWER TRANS	T999	1		
	73	QMF51E2-R80SBS	FUSE	F999	1		
	75	QMF51E2-1R25	FUSE	F997	1		
	76	QMF51E2-1R25	FUSE	F998	1		
	80	GV10004-006AKP	REAR PANEL		1		
	81	E207356-001SM	REAR COVER		1		
	82	E73273-003	SPECIAL SCREW	R.COVER/R.PANEL	2		
	83	E73273-003	SPECIAL SCREW	C3 / REAR PANEL	2		
	84	SBSG3010Z	T.SCREW	F.P.TO CHS.BASE	2		
	86	E73273-003	SPECIAL SCREW	ANTENA/ R.PANEL	2		
		E73273-003	SPECIAL SCREW	AUX/REAR PANEL	1		
		E73273-003	SPECIAL SCREW	E.PLATE/R.PANEL	1		
		E73273-003	SPECIAL SCREW	H.SINK/ R.PANEL	2		
		E73273-003	SPECIAL SCREW	SPK.TEM./R.PANE	2		
		E73273-003	SPECIAL SCREW	R.PANEL/ C.BASE	1		
	87	SBSG3008Z	T.SCREW	C3 & STAY BRKT	2		
	88	GV10002-012A(S)	METAL COVER		1		
	89	SBSB3006M	T.SCREW		2		
	90	E73273-003	SPECIAL SCREW		6		
	91	E209153-001SM	FITTING	DISC 1	1		
	92	E209155-001SM	FITTING	DISC 2	1		
	93	E209157-001SM	FITIING	DISC 3	1		
	94	E310080-230SMKP	M.VOL.KNOB		1		
	96	GV20005-002AKP	WINDOW SCREEN		1		
	97	GV20007-001AKP	ORNAMENT		1		
	98	GBSG3008CC	T.SCREW	M.BOARD & C.BAS	1		
	99	VWF1211-12TTB	CARD WIRE		1		
	100	VWF1213-12TTBW	CARD WIRE		1		
	101	VWF1217-12TTB	WIRE		1		
	102	VWF1210-30TTB	CARD WIRE		1		
	103	VWF1211-30TTB	CARD WIRE		1		
	104	VWF1207-30TTB	CARD WIRE		1		
	109	GV30004-001AKP	FL HOLDER		1		
	110	E3400-439	FELT SPACER		2		
	114	VKZ4001-110	WIRE HOLDER		3		
	115	SBSF2608Z	T.SCREW		1		

CD Mechanism Ass'y and Parts List

■ Grease Point

Block No. M 2 M M

No. EXL-M6

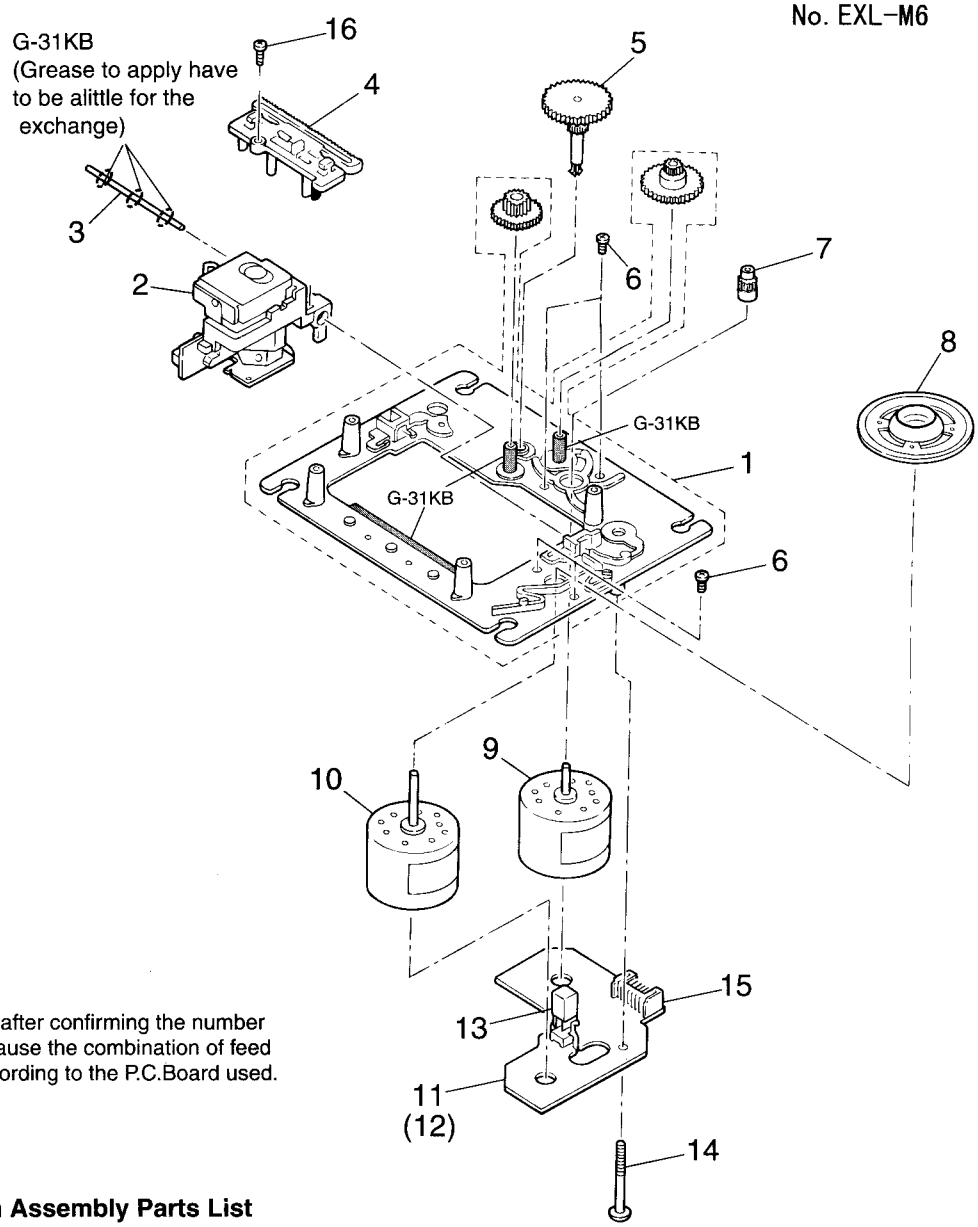

NOTE
Please order moutor after confirming the number of the P.C.Board because the combination of feed motor is different according to the P.C.Board used.

■CD Mechanism Assembly Parts List

⚠	Item	Parts Number	Parts Name	Q'ty	Description	Area
	1	EPB-002PK	MECHA. BASE ASSY	1		
	2	OPTIMA-150S	OPTICAL PICK UP	1		
	3	E407782-001	CD SHAFT	1		
	4	E307746-001	CD RACK	1		
	5	EPB-003A	MECHA GEAR	1		
	6	SDSP2003N	SCREW	4		
	7	E406750-001	PINION GEAR	1		
	8	EPB309173A	TURN TABLE	1		
	9	E406784-001	FEED MOTOR	1	Use the No.11 P.C.Board	
		MDN-4RA3ETA-1	FEED MOTOR	1	Use the No.12 P.C.Board	
	10	E406783-001	SPINDLE MOTOR	1		
	11	EMW10190-001(S)	P. C. BOARD	1		
	12	EMW10190-221(S)	P. C. BOARD	1		
	13	ESB1100-005	LEAF SWITCH	1		
	14	E75832-001	SCREW	1		
	15	EMV5109-006B	CONN. TERMINAL	1		
	16	SDSF2006Z	SCREW	1		

CD Changer Mechanism Ass'y and Parts List

■ Grease Point

Block No. M 3 M M

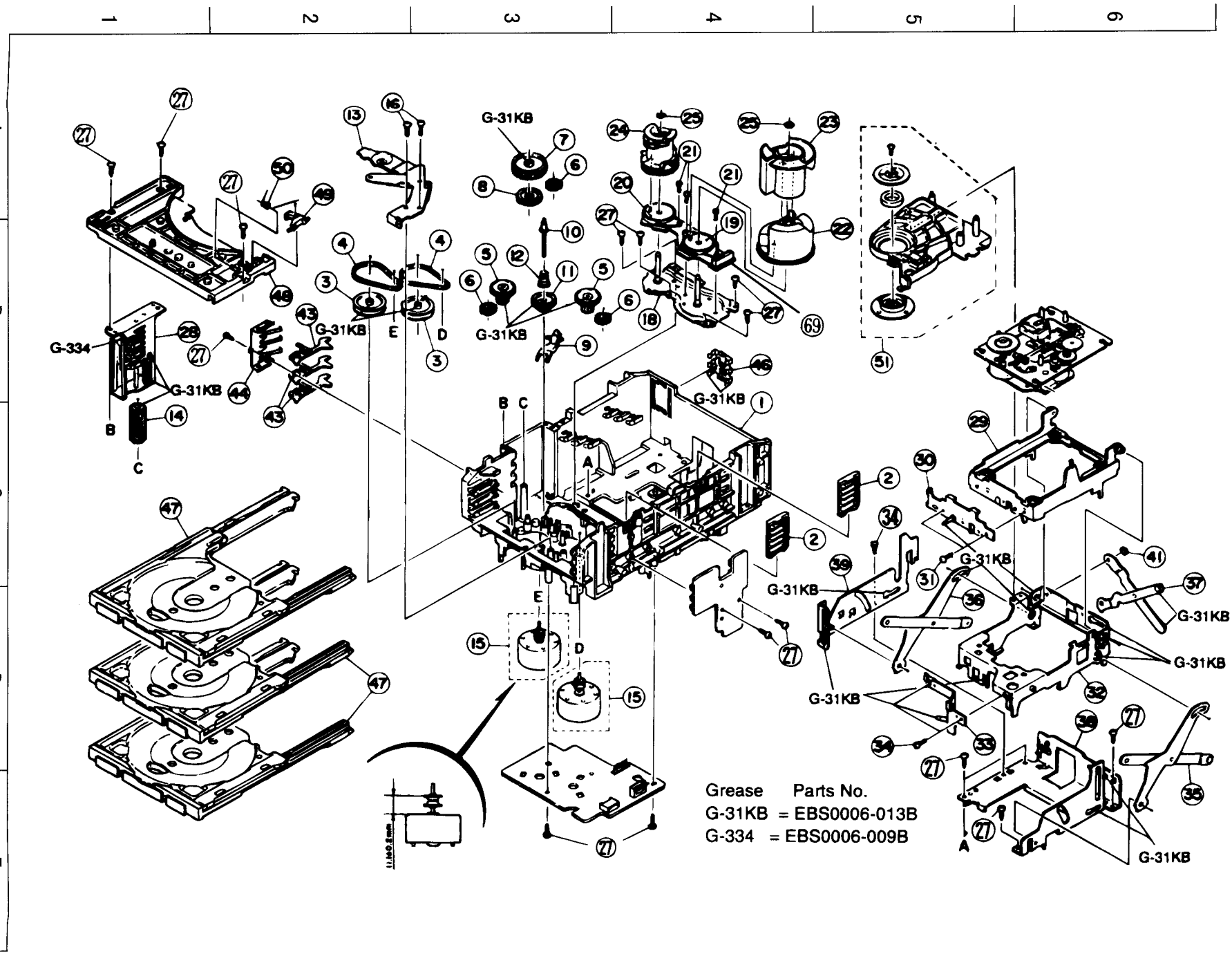

BLOCK NO. M3MM

⚠	REF.	PARTS NO.	PARTS NAME	REMARKS	QTY	SUFFIX	CLR
	1	VKS1144-003	CHASSIS		1		
	2	VKS3698-003	TRAY GUIDE		2		
	3	VKS5532-003	PULLEY GEAR		2		
	4	VKB3000-164	BELT		2		
	5	VKS5505-003	GEAR B		2		
	6	VKS5506-002	GEAR C		3		
	7	VKS5507-002	CROSS GEAR U		1		
	8	VKS5508-002	CROSS GEAR L		1		
	9	VKS5510-003	SELECT LEVER		1		
	10	VKH5769-001	S.G.SHAFT		1		
	11	VKS5511-002	SELECT GEAR		1		
	12	VKW5155-003	COMP.SPRING	FOR SELECT GEAR	1		
	13	VKM3846-002	GEAR BRACKET		1		
	14	VKS5509-002MM	CYLINDER GEAR		1		
	15	MSN5D257A-SA3	D.C.MOTOR		2		
	16	DPSP2616Z	SCREW	FOR MOTOR	2		
	18	VKM3825-00AMM	C.G.BASE ASS'Y		1		
	19	VKZ3172-00A	CAM SW. R ASS'Y		1		
	20	VKZ3173-00A	CAM SW. L ASS'Y		1		
	21	SPST2606Z	SCREW	FOR CAM SW.	3		
	22	VKS2263-002MM	CAM R1		1		
	23	VKS2264-002MM	CAM R2		1		
	24	VKS2265-002MM	CAM GEAR L		1		
	25	WDL316050	SLIT WASHER		2		
	27	SBSF2608Z	T.SCREW		16		
	28	VKS3702-00FMM	DRIVE UNIT		1		
	29	VKS2247-004	MECHA HOLDER A		1		
	30	VKL7767-00B	BRACKET ASS'Y		1		
	31	SBSF2606Z	SCREW	FOR BRACKET	2		
	32	VKM3860-00A	M.HOLDER B AS'Y		1		
	33	VKL7802-00C	M.HOLDER C AS'Y		1		
	34	SDST2604Z	SCREW		3		
	35	VKL7810-00A	LIFTER ASS'Y R		1		
	36	VKL7811-00A	LIFTER ASS'Y L		1		
	37	VKL7812-00A	LIFTER ASS'Y H		1		
	38	VKL2732-002	LIFTER BASE		1		
	39	VKM3823-001	LIFTER BRACKET		1		
	41	WDL266035-2	SLIT WASHER		1		
	43	VKS5514-002MM	LOCK LEVER		3		
	44	VKY3133-002MM	RETURN SPRING		1		
	46	VKY3134-003MM	CLICK SPRING		1		
	47	VKS2252-00EKP	TRAY ASS'Y		3		
	48	VKS2250-003	TOP BRACKET		1		
	49	VKS5515-002	S.TRAY STOPPER		1		
	50	VKW5156-004	TORSION SPRING		1		
	51	VKS3703-00FMMKP	CLAMPER ASSY		1		
	69	QGB2021L1-10	CONNECTOR		1		

Cassette Mechanism Ass'y and Parts List Block No. M 4 M M

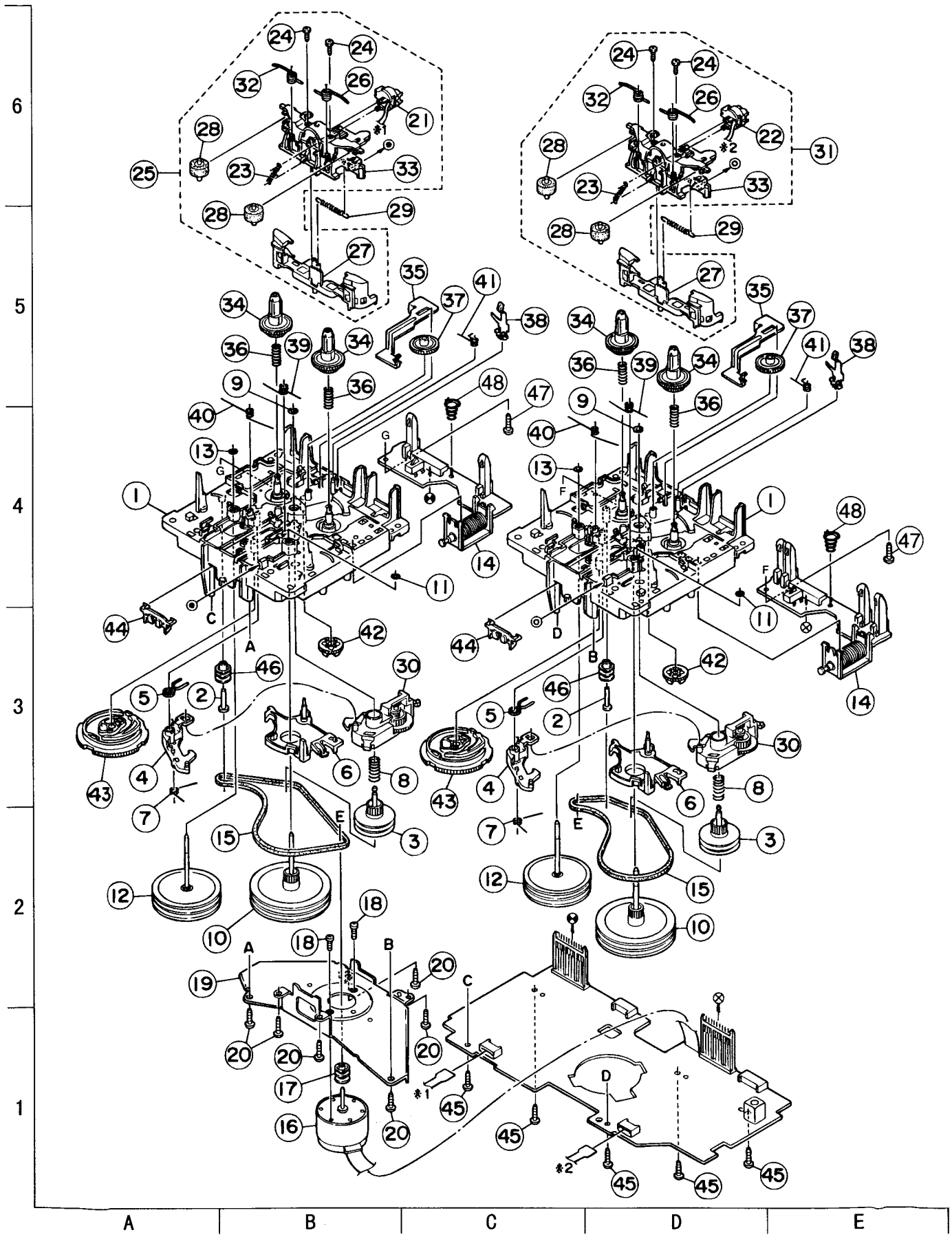

BLOCK NO. M4MM

⚠	REF.	PARTS NO.	PARTS NAME	REMARKS	QTY	SUFFIX	CLR
	1	VKS1165-00FKP	CHASSIS B. ASSY		2		
	2	VKH5786-002	SHAFT		2		
	3	VKR3199-002	MAIN PULLEY		2		
	4	VKS3785-001MM	FR ARM		2		
	5	VKW5284-002	SWING SPRING		2		
	6	VKS2278-001	TRIGGER ARM		2		
	7	VKW5301-001	FR SPRING		2		
	8	VKW5266-001	ELEVATOR SPRING		2		
	9	WDL214025	WASHER		2		
	10	VKF3205-00B	F.WHEEL ASSY(R)		2		
	11	WDL183425	SLIT WASHER		2		
	12	VKF3207-00B	F.WHEEL ASSY(L)		2		
	13	WDL173525-6	SLIT WASHER		2		
	14	VGP2401-00A	DC SOLENOID		2		
	15	VKB3000-174	CAPSTAN BELT(B)		2		
	16	MSI-5U2LWA	D.C.MOTOR ASS'Y		1		
	17	VKR4761-001	MOTOR PULLEY		1		
	18	SPSP2604Z	SCREW		2		
	19	VKM3907-001	JOINT BRACKET		1		
	20	SBSF2608Z	T.SCREW		6		
	21	VGH0424-037	ERASE HEAD		1		
	22	VGH0425-544	R/P&E HEAD		1		
	23	VKW5302-001	HEAD SPRING		2		
	24	VKZ4730-001	SPECIAL SCREW		4		
	25	VKS2279-00CKP	HEAD MOUNT ASSY		1		
	26	VKW5299-001	PIN.ROL.SP.(R)		2		
	27	VKS2277-005	DIRECTION LEVER		2		
	28	VKP4233-00A	PINCH ROL. ASSY		4		
	29	VKW5285-001	RETURN SPRING		2		
	30	VKS3786-00EKP	CLUTCH ASSY		2		
	31	VKS2275-00C	HEAD MOUNT ASSY		1		
	32	VKW5300-001	PIN.ROL.SP.(L)		2		
	33	VKS1167-001KP	HEAD MOUNT BASE		2		
	34	VKS2274-002	REEL GEAR		4		
	35	VKM3906-002	PLAY SW.LEVER		2		
	36	VKW5286-002	B.T. SPRING		4		
	37	VKS5559-001	PLAY IDLE GEAR		2		
	38	VKY3149-001	CASSETTE SP.		2		
	39	VKW5279-001	HEAD BASE SP(R)		2		
	40	VKW5280-001	HEAD BASE SP(L)		2		
	41	VKW5296-001	EARTH SPRING		2		
	42	VKS5560-001	FR IDLE GEAR		2		
	43	VKS1166-003KP	CONTROL CAM		2		
	44	VKS5577-001	FPC HOLDER		2		
	45	SBSF2608Z	T.SCREW	FOR P.W.B.	5		
	46	VKR4749-002	IDLE PULLEY		2		
	47	SBSF2006Z	SCREW		2		
	48	LV40450-001A	CONNECT SP		2		

■ Power Supply & Amplifier

BLOCK NO. 01

⚠	REF.	PARTS NO.	PARTS NAME	REMARKS	SUFFIX
	C 900	QETM1HM-228	E CAPACITOR	2200MF 20% 50V	
	C 901	QETM1HM-228	E CAPACITOR	2200MF 20% 50V	
	C 902	QETM1EM-228	E CAPA	2200MF 20% 25V	
	C 904	QCBB1HK-221Y	C CAPACITOR	220PF 10% 50V	
	C 905	QETN1CM-106Z	E CAPACITOR	10MF 20% 16V	
	C 906	QETN1HM-225Z	E CAPACITOR	2.2MF 20% 50V	
	C 907	QETC1CM-226ZM	E CAPACITOR	22MF 20% 16V	
	C 913	QFLC1HJ-683ZM	M CAPACITOR	.068MF 5% 50V	
	C 914	QFLC1HJ-683ZM	M CAPACITOR	.068MF 5% 50V	
	C 915	QFLC1HJ-683ZM	M CAPACITOR	.068MF 5% 50V	
	C 916	QFLC1HJ-683ZM	M CAPACITOR	.068MF 5% 50V	
	C 917	QETN1JM-476Z	E CAPACITOR	47MF 20% 63V	
	C 918	QETN1HM-226Z	E CAPACITOR	22MF 20% 50V	
	C 919	QETB1JM-107	E CAPACITOR	100MF 20% 63V	
	C 920	QFLC1HJ-683ZM	M CAPACITOR	.068MF 5% 50V	
	C 922	QETN1HM-226Z	E CAPACITOR	22MF 20% 50V	
	C 923	QCVB1CN-103Y	C CAPACITOR	.010MF 30% 16V	
	C 924	QETN1HM-475Z	E CAPACITOR	4.7MF 20% 50V	
	C 925	QFV41HJ-104ZM	TF CAPACITOR	.10MF 5% 50V	
	C 926	QFV41HJ-104ZM	TF CAPACITOR	.10MF 5% 50V	
	C 927	QFV41HJ-104ZM	TF CAPACITOR	.10MF 5% 50V	
	C 928	QFV41HJ-104ZM	TF CAPACITOR	.10MF 5% 50V	
	C 929	QCSB1HJ-100Y	C CAPACITOR	10PF 5% 50V	
	C 930	QCSB1HJ-100Y	C CAPACITOR	10PF 5% 50V	
	C 931	QETN1HM-476Z	E CAPACITOR	47MF 20% 50V	
	C 932	QETN1HM-476Z	E CAPACITOR	47MF 20% 50V	
	C 933	QCBB1HK-101Y	C CAPACITOR	100PF 10% 50V	
	C 934	QCBB1HK-101Y	C CAPACITOR	100PF 10% 50V	
	C 935	QTE1V06-106Z	E.CAPA. I.M		
	C 936	QTE1V06-106Z	E.CAPA. I.M		
	C 937	QETN1HM-106Z	E CAPACITOR	10MF 20% 50V	
	C 938	QETN1HM-106Z	E CAPACITOR	10MF 20% 50V	
	C 939	QCBB1HK-101Y	C CAPACITOR	100PF 10% 50V	
	C 940	QCBB1HK-101Y	C CAPACITOR	100PF 10% 50V	
	C 941	QETN1HM-226Z	E CAPACITOR	22MF 20% 50V	
	C 942	QETN1HM-226Z	E CAPACITOR	22MF 20% 50V	
	C 943	QETN1HM-105Z	E CAPACITOR	1.0MF 20% 50V	
	C 944	QFLC1HJ-223ZM	M CAPACITOR	.022MF 5% 50V	
	C 945	QETN1CM-476Z	E CAPACITOR	47MF 20% 16V	
	C 946	QETC1CM-226ZM	E CAPACITOR	22MF 20% 16V	
	C 947	QFLC1HJ-223ZM	M CAPACITOR	.022MF 5% 50V	
	C 948	QFLC1HJ-223ZM	M CAPACITOR	.022MF 5% 50V	
	C 949	QFLC1HJ-223ZM	M CAPACITOR	.022MF 5% 50V	
	C 950	QFLC1HJ-223ZM	M CAPACITOR	.022MF 5% 50V	
	C 951	QETN1HM-105Z	E CAPACITOR	1.0MF 20% 50V	
	C 958	QCF21HP-223A	C.CAPA. I.M	.022MF +80:-20%	
	C 961	QETN1HM-106Z	E CAPACITOR	10MF 20% 50V	
	C 963	QFLC1HJ-682ZM	M CAPACITOR	.015MF 5% 50V	
	C 964	QFLC1HJ-682ZM	M CAPACITOR	6800PF 5% 50V	
	C 967	QFV41HJ-104ZM	TF CAPACITOR	.10MF 5% 50V	
	C 971	QCY31HK-272Z	C.CAPA. I.M	2700PF 10% 50V	
	C 972	QCY31HK-272Z	C.CAPA. I.M	2700PF 10% 50V	
	C 973	QCF31HP-103Z	C CAPACITOR	.010MF +80:-20%	
	CN900	EMV7125-011R	CONECTOR		
	CN901	EMV7125-008R	CONNECTOR		

BLOCK NO. 01

⚠	REF.	PARTS NO.	PARTS NAME	REMARKS	SUFFIX
	CN903	EMV7145-004Z	SOCKET I.M		
	CN904	EMV7145-005Z	SOCKET I.M		
	CN905	EMV7145-005Z	SOCKET I.M		
	D 900	1SS133-T2	DIODE		
	D 901	MTZ9.1JA	ZENER DIODE		
	D 902	1SR35-100	SI DIODE		
	D 903	1SR35-100	SI DIODE		
	D 908	1N5401TM	DIODE		
	D 909	1N5401TM	DIODE		
	D 910	1N5401TM	DIODE		
	D 911	1N5401TM	DIODE		
	D 916	1SR139-200	DIODE I.M		
	D 917	1SR139-200	DIODE I.M		
	D 918	MTZ33JC	Z DIODE I M		
	D 919	UZ6.2BSA	Z.DIODE IDM		
	D 920	MTZ24JC	Z DIODE I M		
	D 921	1SS133-T2	DIODE		
	D 922	1SS133-T2	DIODE		
	D 923	1SS133-T2	DIODE		
	D 924	1SS133-T2	DIODE		
	D 926	1SS133-T2	DIODE		
	D 927	MTZ5.1JC	ZENER DIODE		
	FT003	EMG7331-003Z	FUSE CLIP I.M		
	FT004	EMG7331-003Z	FUSE CLIP I.M		
	FT005	EMG7331-003Z	FUSE CLIP I.M		
	FT006	EMG7331-003Z	FUSE CLIP I.M		
	FT007	EMG7331-003Z	FUSE CLIP I.M		
	FT008	EMG7331-003Z	FUSE CLIP I.M		
	FW901	EWR33D-32LS	FLAT WIRE		
	FW999	EWR39D-25LS	FLAT WIRE		
	IC900	TDA7295	IC		
	IC901	TDA7295	IC		
	JA901	EMB90TV-402A	SPK TERMINAL		
	L 100	VQZ0048-009	INDUCTOR		
	L 900	EQL0011-R45J1	INDUCTOR		
	L 901	EQL0011-R45J1	INDUCTOR		
	L 971	VQZ0104-003	INDUCTOR		
	L 972	VQZ0104-003	INDUCTOR		
	Q 901	2SA1175	TRANSISTOR		
	Q 902	DTC144TSA-T	D.TR.I.M		
	Q 903	DTA144TSA-T	D.TR.I.M		
	Q 904	2SB1375	TRANSISTOR		
	Q 905	2SC2785	TRANSISTOR		
	Q 906	2SC2785	TRANSISTOR		
	Q 911	2SA934(Q,R)	TR I.M		
	Q 912	DTA114ES	D.TR.I.M		
	Q 917	2SC945A	TRANSISTOR		
	Q 918	2SC945A	TRANSISTOR		
	Q 919	2SA933S(RS)	TR.I.M		
	Q 920	2SC945A	TRANSISTOR		
	Q 921	2SD2144S(VW)	TRANSISTOR		
	Q 922	2SD2144S(VW)	TRANSISTOR		
	Q 923	DTC114YSA-T	D.TR.I.M		
	Q 924	DTC114YSA-T	D.TR.I.M		
	Q 925	DTA114ES	D.TR.I.M		

BLOCK NO. 01

⚠	REF.	PARTS NO.	PARTS NAME	REMARKS	SUFFIX
	Q 983	2SD2144S(VW)	TRANSISTOR		
	Q 984	2SD2144S(VW)	TRANSISTOR		
	R 900	QRD161J-471	C RESISTOR	470 5% 1/4W	
	R 901	QRD161J-102	C RESISTOR	1.0K 5% 1/4W	
	R 902	QRD161J-1R0	C RESISTOR	1.0 5% 1/4W	
	R 903	QRD161J-1R0	C RESISTOR	1.0 5% 1/4W	
	R 904	QRD161J-1R0	C RESISTOR	1.0 5% 1/4W	
	R 905	QRD167J-682	C RESISTOR	6.8K 5% 1/4W	
	R 906	QRD161J-122	C RESISTOR	1.2K 5% 1/4W	
	R 907	QRD161J-821	C RESISTOR	820 5% 1/4W	
	R 908	QRZ0077-151X	F.RES. I.M	150 1/0W	
	R 909	QRD161J-472	C RESISTOR	4.7K 5% 1/4W	
	R 910	QRD161J-471	C RESISTOR	470 5% 1/4W	
	R 911	QRD161J-222	C RESISTOR	2.2K 5% 1/4W	
	R 912	QRD161J-222	C RESISTOR	2.2K 5% 1/4W	
	R 913	QRD161J-472	C RESISTOR	4.7K 5% 1/4W	
	R 914	QRD161J-472	C RESISTOR	4.7K 5% 1/4W	
	R 915	QRZ0077-100	F RES I/M	10 1/0W	
	R 916	QRD161J-222	C RESISTOR	2.2K 5% 1/4W	
	R 921	QRD161J-222	C RESISTOR	2.2K 5% 1/4W	
	R 922	QRD161J-222	C RESISTOR	2.2K 5% 1/4W	
	R 931	QRD161J-1R0	C RESISTOR	1.0 5% 1/4W	
	R 933	QRD161J-1R0	C RESISTOR	1.0 5% 1/4W	
	R 935	QRD161J-102	C RESISTOR	1.0K 5% 1/4W	
	R 936	QRD161J-103	C RESISTOR	10K 5% 1/4W	
	R 937	QRD161J-152	C RESISTOR	1.5K 5% 1/4W	
	R 938	QRD161J-330	C RESISTOR	33 5% 1/4W	
	R 939	QRG01DJ-471X	OMF RESISTOR	470 5% 1/1W	
	R 940	QRD14CJ-100SX	UNF.C.RES. I.M	10 5% 1/4W	
	R 941	QRD14CJ-100SX	UNF.C.RES. I.M	10 5% 1/4W	
	R 942	QRD14CJ-100SX	UNF.C.RES. I.M	10 5% 1/4W	
	R 943	QRD14CJ-100SX	UNF.C.RES. I.M	10 5% 1/4W	
	R 944	QRD161J-823	C RESISTOR	82K 5% 1/4W	
	R 945	QRD161J-104	C RESISTOR	100K 5% 1/4W	
	R 946	QRX014J-R22	UNF.MF.RES.I.M	5% 1/1W	
	R 947	QRX014J-R22	UNF.MF.RES.I.M	5% 1/1W	
	R 948	QRD161J-122	C RESISTOR	1.2K 5% 1/4W	
	R 949	QRD161J-122	C RESISTOR	1.2K 5% 1/4W	
	R 950	QRD161J-823	C RESISTOR	82K 5% 1/4W	
	R 951	QRD161J-823	C RESISTOR	82K 5% 1/4W	
	R 952	QRD14CJ-561SX	UNF.C.RES. I.M	560 5% 1/4W	
	R 953	QRD14CJ-561SX	UNF.C.RES. I.M	560 5% 1/4W	
	R 954	QRD161J-104	C RESISTOR	100K 5% 1/4W	
	R 955	QRD161J-104	C RESISTOR	100K 5% 1/4W	
	R 956	QRD161J-223	C RESISTOR	22K 5% 1/4W	
	R 957	QRD161J-102	C RESISTOR	10K 5% 1/4W	
	R 958	QRZ0077-4R7X	F RESISTOR	4.7 1/0W	
	R 959	QRD161J-104	C RESISTOR	100K 5% 1/4W	
	R 960	QRD161J-223	C RESISTOR	22K 5% 1/4W	
	R 961	QRD161J-104	C RESISTOR	100K 5% 1/4W	
	R 962	QRD161J-103	C RESISTOR	10K 5% 1/4W	
	R 963	QRD161J-122	C RESISTOR	470 5% 1/4W	
	R 964	QRD161J-681	C RESISTOR	680 5% 1/4W	
	R 965	QRD161J-681	F.RES. I.M	680 1/0W	
	R 966	QRD161J-821	C RESISTOR	820 5% 1/4W	

BLOCK NO. 01

⚠	REF.	PARTS NO.	PARTS NAME	REMARKS	SUFFIX
	R 967	QRD161J-821	C RESISTOR	820 5% 1/4W	
	R 968	QRD161J-103	C RESISTOR	10K 5% 1/4W	
	R 969	QRD161J-103	C RESISTOR	10K 5% 1/4W	
	R 971	QRD161J-563	C RESISTOR	56K 5% 1/4W	
	R 972	QRD161J-563	C RESISTOR	56K 5% 1/4W	
	R 973	QRD167J-4R7	C RESISTOR	4.7 5% 1/4W	
	R 974	QRD167J-4R7	C RESISTOR	4.7 5% 1/4W	
	R 975	QRD161J-104	C RESISTOR	100K 5% 1/4W	
	R 976	QRD161J-103	C RESISTOR	10K 5% 1/4W	
	R 977	QRD161J-184	C RESISTOR	100K 5% 1/4W	
	R 978	QRD161J-184	C RESISTOR	180K 5% 1/4W	
	R 983	QRD161J-472	C RESISTOR	4.7K 5% 1/4W	
	R 984	QRD161J-472	C RESISTOR	4.7K 5% 1/4W	
	R 990	QRD161J-102	C RESISTOR	1.0K 5% 1/4W	
	R 991	QRD161J-102	C RESISTOR	1.0K 5% 1/4W	
	R 992	QRD161J-472	C RESISTOR	4.7K 5% 1/4W	
	R 993	QRD161J-472	C RESISTOR	4.7K 5% 1/4W	
	RY901	QSK0057-001	RELAY		
	TB001	EMZ4001-002Z	TAB I.M		
	TB002	EMZ4001-002Z	TAB I.M		
	WA-A	QWE881-14RR	WIRE		

■ Preamplifier & Tuner

BLOCK NO. 02

⚠	REF.	PARTS NO.	PARTS NAME	REMARKS	SUFFIX
	C 1	QCC11EM-223V	C CAPACITOR	.022MF 20% 25V	
	C 2	QCXB1CM-332Y	C CAPACITOR	3300PF 20% 16V	
	C 3	QCC11EM-473V	C CAPACITOR	.047MF 20% 25V	
	C 4	QCVB1CN-103Y	C CAPACITOR	.010MF 30% 16V	
	C 5	QETN1AM-107Z	E CAPACITOR	100MF 20% 10V	
	C 6	QCBB1HK-331Y	C CAPACITOR	330PF 10% 50V	
	C 7	QCFB1HZ-104Y	C CAPACITOR	.10MF +80:-20%	
	C 8	QCSB1HJ-150Y	C CAPACITOR	15PF 5% 50V	
	C 11	QCC11EM-473V	C CAPACITOR	.047MF 20% 25V	
	C 12	QCSB1HJ-150Y	C CAPACITOR	15PF 5% 50V	
	C 13	QCVB1CN-103Y	C CAPACITOR	.010MF 30% 16V	
	C 17	QCGB1HK-102	C CAPACITOR	1000PF 10% 50V	
	C 18	QCXB1CM-152Y	C CAPACITOR	1500PF 20% 16V	
	C 19	QCXB1CM-152Y	C CAPACITOR	470PF 10% 50V	
	C 21	QCC11EM-473V	C CAPACITOR	.047MF 20% 25V	
	C 30	QEK61CM-476	E CAPACITOR	47MF 20% 16V	
	C 31	QCSB1HJ-330Y	C CAPACITOR	39PF 5% 50V	
	C 32	QCGB1HK-102	C CAPACITOR	1000PF 10% 50V	
	C 33	QEK61AM-107ZM	E CAPACITOR	100MF 20% 10V	
	C 34	QCSB1HJ-150Y	C CAPACITOR	15PF 5% 50V	
	C 35	QCVB1CN-103Y	C CAPACITOR	.010MF 30% 16V	
	C 36	QEK61EM-106ZN	E CAPACITOR	10MF 20% 16V	
	C 37	QCVB1CN-103Y	C CAPACITOR	.010MF 30% 16V	
	C 38	QCC11EM-473V	C CAPACITOR	.047MF 20% 25V	
	C 39	QCC11EM-473V	C CAPACITOR	.047MF 20% 25V	
	C 40	QCVB1CN-103Y	C CAPACITOR	.010MF 30% 16V	
	C 41	QEK61HM-104ZN	E CAPACITOR	.10MF 20% 50V	
	C 42	QEK61HM-474GZ	E CAPACITOR	.47MF 20% 50V	
	C 43	QEK61HM-335ZN	E CAPACITOR	3.3MF 20% 50V	
	C 44	QCBB1HK-221Y	C CAPACITOR	68PF 5% 50V	
	C 45	QEK61EM-106ZN	E CAPACITOR	3.3MF 20% 50V	
	C 46	QCC11EM-223V	C CAPACITOR	.022MF 20% 25V	
	C 47	QCVB1CN-103Y	C CAPACITOR	.010MF 30% 16V	
	C 49	QFLC1HJ-183ZM	M CAPACITOR	.018MF 5% 50V	
	C 50	QFLC1HJ-183ZM	M CAPACITOR	.039MF 5% 50V	
	C 51	QEK51HM-105G	E CAPACITOR	1.0MF 20% 50V	
	C 52	QEK51HM-105G	E CAPACITOR	1.0MF 20% 50V	
	C 53	QCGB1HK-102	C CAPACITOR	1000PF 10% 50V	
	C 54	QEK61HM-335ZN	E CAPACITOR	3.3MF 20% 50V	
	C 55	QCSB1HJ-120Y	C CAPACITOR	12PF 5% 50V	
	C 60	QEK61AM-107ZM	E CAPACITOR	100MF 20% 10V	
	C 61	QCSB1HJ-120Y	C CAPACITOR	12PF 5% 50V	
	C 62	QCSB1HJ-120Y	C CAPACITOR	12PF 5% 50V	
	C 63	QCC11EM-473V	C CAPACITOR	.047MF 20% 25V	
	C 65	QCGB1HK-102	C CAPACITOR	1000PF 10% 50V	
	C 66	QCBB1HK-151Y	C CAPACITOR	150PF 10% 50V	
	C 67	QCBB1HK-151Y	C CAPACITOR	150PF 10% 50V	
	C 68	QCBB1HK-101Y	C CAPACITOR	100PF 10% 50V	
	C 69	QFVB1HJ-105	TF.CAPA. I.M XX	1.0MF 5% 50V	
	C 70	QCXB1CM-392Y	C CAPACITOR	3900PF 20% 16V	
	C 71	QETN1CM-476Z	E CAPACITOR	47MF 20% 16V	
	C 72	QCGB1HK-102	C CAPACITOR	1000PF 10% 50V	
	C 80	QCBB1HK-820Y	C CAPACITOR	82PF 10% 50V	
	C 81	QCSB1HJ-470Y	C CAPACITOR	47PF 5% 50V	
	C 82	EETC1CM-106ZJC	E.CAPACITOR		

BLOCK NO. 02

⚠	REF.	PARTS NO.	PARTS NAME	REMARKS	SUFFIX
	C 83	QCC11EM-473V	C CAPACITOR	.047MF 20% 25V	
	C 84	QETC1HM-225ZM	E.CAPA. I.M	2.2MF 20% 50V	
	C 85	QCBB1HK-331Y	C CAPACITOR	330PF 10% 50V	
	C 86	QCBB1HK-561Y	C CAPACITOR	560PF 10% 50V	
	C 89	QCGB1HK-102	C CAPACITOR	1000PF 10% 50V	
	C 90	QCVB1CN-103Y	C CAPACITOR	.010MF 30% 16V	
	C 98	QCSB1HJ-100Y	C CAPACITOR	10PF 5% 50V	
	C 101	QCSB1HJ-330Y	C CAPACITOR	33PF 5% 50V	
	C 102	QCSB1HJ-100Y	C CAPACITOR	10PF 5% 50V	
	C 103	QFV41HJ-224ZM	CAPACITOR	.22MF 5% 50V	
	C 104	EETB1CM-226E	E.CAPA. I.M		
	C 106	QETN1HM-335Z	E CAPACITOR	3.3MF 20% 50V	
	C 108	QTE1V06-106Z	E.CAPA. I.M		
	C 110	QFV71HJ-124ZM	TF CAPACITOR	.12MF 5% 50V	
	C 111	QFV71HJ-124ZM	TF CAPACITOR	.12MF 5% 50V	
	C 112	QETN1AM-107Z	E CAPACITOR	100MF 20% 10V	
	C 113	QTE1V06-106Z	E.CAPA. I.M		
	C 116	QETC1HM-106ZN	E CAPACITOR	10MF 20% 50V	
	C 122	QETN1HM-335Z	E CAPACITOR	3.3MF 20% 50V	
	C 130	QCS31HJ-100Z	C CAPACITOR	10PF 5% 50V	
	C 201	QCSB1HJ-330Y	C CAPACITOR	33PF 5% 50V	
	C 202	QCSB1HJ-100Y	C CAPACITOR	10PF 5% 50V	
	C 203	QFV41HJ-224ZM	CAPACITOR	.22MF 5% 50V	
	C 204	EETB1CM-226E	E.CAPA. I.M		
	C 206	QETN1HM-335Z	E CAPACITOR	3.3MF 20% 50V	
	C 208	QTE1V06-106Z	E.CAPA. I.M		
	C 210	QFV71HJ-124ZM	TF CAPACITOR	.12MF 5% 50V	
	C 211	QFV71HJ-124ZM	TF CAPACITOR	.12MF 5% 50V	
	C 212	QETN1AM-107Z	E CAPACITOR	100MF 20% 10V	
	C 213	QTE1V06-106Z	E.CAPA. I.M		
	C 216	QETC1HM-106ZN	E CAPACITOR	10MF 20% 50V	
	C 222	QETN1HM-335Z	E CAPACITOR	3.3MF 20% 50V	
	C 230	QCS31HJ-100Z	C CAPACITOR	10PF 5% 50V	
	C 301	QCGB1HK-102	C CAPACITOR	1000PF 10% 50V	
	C 303	QETC1HM-225ZN	E CAPACITOR	2.2MF 20% 50V	
	C 305	QFLC1HJ-223ZM	M CAPACITOR	.022MF 5% 50V	
	C 306	EETB1HM-475E	E.CAPA. I.M		
	C 307	EETB1HM-475E	E.CAPA. I.M		
	C 308	EETB1CM-226E	E.CAPA. I.M		
	C 309	QCSB1HJ-150Y	C CAPACITOR	15PF 5% 50V	
	C 310	QCBB1HK-471Y	C CAPACITOR	470PF 10% 50V	
	C 311	QCSB1HJ-150Y	C CAPACITOR	15PF 5% 50V	
	C 312	QCBB1HK-151Y	C CAPACITOR	150PF 10% 50V	
	C 313	QCBB1HK-471Y	C CAPACITOR	470PF 10% 50V	
	C 314	QETC1HM-224Z	E.CAPA. I.M	.22MF 20% 50V	
	C 315	QFLC1HJ-103ZM	M CAPACITOR	.033MF 5% 50V	
	C 316	QFLC1HJ-393ZM	M CAPACITOR	.039MF 5% 50V	
	C 317	QFLC1HJ-473ZM	TF CAPACITOR	.10MF 5% 50V	
	C 318	QFLC1HJ-103ZM	M CAPACITOR	.010MF 5% 50V	
	C 319	QFLC1HJ-393ZM	M CAPACITOR	.039MF 5% 50V	
	C 320	QFLC1HJ-473ZM	M CAPACITOR	.047MF 5% 50V	
	C 321	EETB1EM-106E	E.CAPA. I.M		
	C 322	EETB1AM-476E	E.CAPA. I.M		
	C 324	EETC1CM-106ZJC	E.CAPACITOR		
	C 325	EETB1HM-105E	E.CAPA. I.M		

BLOCK NO. 02

⚠	REF.	PARTS NO.	PARTS NAME	REMARKS	SUFFIX
	C 327	QFV71HJ-184ZM	TF CAPACITOR	.18MF 5% 50V	
	C 329	QETB1HM-474N	E.CAPA. I.M	.47MF 20% 50V	
	C 332	QFLC1HJ-103ZM	M CAPACITOR	.010MF 5% 50V	
	C 334	QFLC1HJ-223ZM	M CAPACITOR	.022MF 5% 50V	
	C 335	QETN1AM-107Z	E CAPACITOR	100MF 20% 10V	
	C 351	EETB1CM-476	E.CAPA. I.M		
	C 352	QETN1EM-106Z	E CAPACITOR	10MF 20% 25V	
	C 362	QCBB1HK-151Y	C CAPACITOR	150PF 10% 50V	
	C 363	QETN1AM-108Z	E CAPACITOR	1000MF 20% 10V	
	C 364	QETN1AM-108Z	E CAPACITOR	1000MF 20% 10V	
	C 367	QFLM1HJ-333Z	TF CAPACITOR	.10MF 5% 50V	
	C 368	QFLM1HJ-333Z	M CAPACITOR	.033MF 5% 50V	
	C 380	QCSB1HJ-330Y	C CAPACITOR	33PF 5% 50V	
	C 381	QCXB1CM-182Y	C CAPACITOR	1800PF 20% 16V	
	C 382	QFLC1HJ-153ZM	M CAPACITOR	.015MF 5% 50V	
	C 383	QCBB1HK-681Y	C CAPACITOR	680PF 10% 50V	
	C 384	EETB1HM-105E	E.CAPA. I.M		
	C 385	QETC1HM-476ZM	E CAPACITOR	47MF 20% 50V	
	C 908	EETB1HM-475E	E.CAPA. I.M		
	C 909	EETB1CM-226E	E.CAPA. I.M		
	C 910	EETC1CM-106ZJC	E.CAPACITOR		
	C 911	QFLC1HJ-103ZM	M CAPACITOR	.010MF 5% 50V	
	C 912	QETN1AM-107Z	E CAPACITOR	100MF 20% 10V	
	C 920	QFLC1HJ-103ZM	M CAPACITOR	.010MF 5% 50V	
	C 921	QETN1AM-107Z	E CAPACITOR	100MF 20% 10V	
	C 968	QCVB1CN-103Y	C CAPACITOR	.010MF 30% 16V	
	CF 1	VCF2M3B-104	C FILTER		
	CF 2	VCF2S3B-102	C FILTER		
	CF 3	VCF1Z2Z-115Z	C FILTER		
	CF 4	CMU2-456A05	CERA LOCK		
	CN302	VMC0332-010V	CONNECTOR		
	CN303	VMC0332-013V	FFC CONNE		
	CN304	VMC0332-007V	CONNECTOR		
	CN305	VMC0332-011V	CONNECTOR		
	CN306	VMC0332-010V	CONNECTOR		
	CN307	EMV5125-008	CONNECTOR		
	CN308	EMV5125-011	CONNECTOR		
	CN313	EMV7145-003Z	SOCKET I.M		
	CN316	VMC0332-017V	VMC0332-017		
	D 1	1SS133-T2	DIODE		
	D 2	1SS133-T2	DIODE		
	D 3	1SS133-T2	DIODE		
	D 4	1SS133-T2	DIODE		
	D 7	1SS133-T2	DIODE		
	D 300	RB721Q-T2	S.B.DIODE		
	D 301	1SS133-T2	DIODE		
	D 302	1SS133-T2	DIODE		
	D 303	RB721Q-T2	S.B.DIODE		
	D 304	1SS133-T2	DIODE		
	D 305	MTZ5.1JAT-77	ZENER DIODE		
	D 306	1SS133-T2	DIODE		
	D 307	1SS133-T2	DIODE		
	D 308	1SS133-T2	DIODE		
	D 310	1SS133-T2	DIODE		
	D 311	1SS133-T2	DIODE		

BLOCK NO. 02

⚠	REF.	PARTS NO.	PARTS NAME	REMARKS	SUFFIX
	D 312	1SS133-T2	DIODE		
	D 313	1SS133-T2	DIODE		
	D 314	1SS133-T2	DIODE		
	D 315	1SR35-100	SI DIODE		
	D 316	RB721Q-T2	S.B.DIODE		
	D 317	RB721Q-T2	S.B.DIODE		
	D 318	1SS133-T2	DIODE		
	D 319	1SS133-T2	DIODE		
	D 322	1SS133-T2	DIODE		
	D 380	1SS133-T2	DIODE		
	D 381	RB721Q-T2	S.B.DIODE		
	D 382	RB721Q-T2	S.B.DIODE		
	D 904	MTZ4.3JB	ZENER DIODE		
	D 905	1SS133-T2	DIODE		
	D 906	1SS133-T2	DIODE		
	D 907	MTZ3.9JB	Z DIODE		
	D 912	RD5.6JSAB1	ZENER DIODE		
	D 913	1SS133-T2	DIODE		
	D 915	1SS133-T2	DIODE		
	D 928	MTZ2.4JB	Z.DIODE I.M		
	EP001	E409182-001SM	GRAND TERMINAL		
	FW501	EWR32D-26SSV	FLAT WIRE		
	IC 1	TA2057N	IC		
	IC 2	LC72136N	IC		
	IC 4	BU1923	IC(RDS)		
	IC301	NJM4580L	IC		
	IC302	BH3854AS	IC		
	IC303	NJM4580L	IC		
	J 1	EMB41YV-302K	ANT TERMINAL		
	JA301	EMN00TV-222AJ2	PIN JACK		
	L 1	VQZ0098-101	COIL BLOCK		
	L 4	VQP0018-221	INDUCTOR		
	L 5	EQL4007-101	INDUCTOR I.M		
	L 10	VQZ0069-002S	TRAP COIL		
	L 11	VQP0018-2R7	INDUCTOR		
	L 12	VQP0018-330	INDUCTOR		
	L 302	VQZ0048-009	INDUCTOR		
	L 303	VQZ0048-009	INDUCTOR		
	L 304	VQZ0048-009	INDUCTOR		
	L 305	VQZ0048-009	INDUCTOR		
	L 306	QQL29BJ-100Z	INDUCTOR		
	PP301	VMZ0015-005	POST PIN		
	PP302	VMZ0015-005	POST PIN		
	Q 1	2SC1923	TR TAPE		
	Q 2	DTA114YS	D.TR.I.M		
	Q 3	2SC2785	TRANSISTOR		
	Q 4	2SC2785	TRANSISTOR		
	Q 6	DTA114YS	D.TR.I.M		
	Q 14	2SA1175	TRANSISTOR		
	Q 16	2SC2785	TRANSISTOR		
	Q 301	2SD2144S(VW)	TRANSISTOR		
	Q 302	2SD2144S(VW)	TRANSISTOR		
	Q 303	DTA114YS	D.TR.I.M		
	Q 304	2SK246(GR,BL)	FET I.M		
	Q 305	2SK246(GR,BL)	FET I.M		

BLOCK NO. 02

⚠	REF.	PARTS NO.	PARTS NAME	REMARKS	SUFFIX
	Q 306	DTC144TSA-T	D.TR.I.M		
	Q 309	2SC2785	TRANSISTOR		
	Q 310	2SC2785	TRANSISTOR		
	Q 312	2SC2785	TRANSISTOR		
	Q 314	DTA144ES	D.TR.I.M		
	Q 320	DTC144TSA-T	D.TR.I.M		
	Q 380	2SC2785	TRANSISTOR		
	Q 381	2SC2785	TRANSISTOR		
	Q 907	2SA1175	TRANSISTOR		
	Q 908	2SC2785	TRANSISTOR		
	Q 909	2SB1375	TRANSISTOR		
	Q 910	2SC2785	TRANSISTOR		
	Q 913	2SB1375	TRANSISTOR		
	Q 914	2SC2785	TRANSISTOR		
	Q 915	2SC2785	TRANSISTOR		
	Q 916	2SC2785	TRANSISTOR		
	R 1	QRD161J-102	C RESISTOR	1.0K 5% 1/4W	
	R 2	QRD161J-181	C RESISTOR	180 5% 1/4W	
	R 3	QRD161J-101	C RESISTOR	100 5% 1/4W	
	R 10	QRD161J-152	C RESISTOR	1.5K 5% 1/4W	
	R 12	QRD161J-102	C RESISTOR	1.0K 5% 1/4W	
	R 13	QRD161J-104	C RESISTOR	100K 5% 1/4W	
	R 15	QRD161J-103	C RESISTOR	10K 5% 1/4W	
	R 16	QRD161J-103	C RESISTOR	10K 5% 1/4W	
	R 20	QRD161J-331	C RESISTOR	330 5% 1/4W	
	R 21	QRD161J-224	C RESISTOR	220K 5% 1/4W	
	R 22	QRD161J-331	C RESISTOR	330 5% 1/4W	
	R 24	QRD161J-271	C RESISTOR	270 5% 1/4W	
	R 25	QRD161J-473	C RESISTOR	27K 5% 1/4W	
	R 26	QRD161J-273	C RESISTOR	27K 5% 1/4W	
	R 27	QRD161J-223	C RESISTOR	22K 5% 1/4W	
	R 29	QRD161J-473	C RESISTOR	47K 5% 1/4W	
	R 30	QRD161J-103	C RESISTOR	10K 5% 1/4W	
	R 31	QRD161J-103	C RESISTOR	10K 5% 1/4W	
	R 34	QRD161J-222	C RESISTOR	2.2K 5% 1/4W	
	R 35	QRD161J-222	C RESISTOR	2.2K 5% 1/4W	
	R 36	QRD161J-103	C RESISTOR	10K 5% 1/4W	
	R 37	QRD167J-562	C RESISTOR	5.6K 5% 1/4W	
	R 38	QRD161J-392	C RESISTOR	3.9K 5% 1/4W	
	R 39	QRD161J-392	C RESISTOR	3.9K 5% 1/4W	
	R 42	QRD161J-102	C RESISTOR	1.0K 5% 1/4W	
	R 43	QRD161J-102	C RESISTOR	1.0K 5% 1/4W	
	R 44	QRD161J-102	C RESISTOR	1.0K 5% 1/4W	
	R 45	QRD161J-102	C RESISTOR	1.0K 5% 1/4W	
	R 46	QRD161J-104	C RESISTOR	100K 5% 1/4W	
	R 47	QRD161J-103	C RESISTOR	10K 5% 1/4W	
	R 48	QRD161J-331	C RESISTOR	330 5% 1/4W	
	R 49	QRD161J-102	C RESISTOR	1.0K 5% 1/4W	
	R 52	QRD161J-472	C RESISTOR	4.7K 5% 1/4W	
	R 54	QRD161J-472	C RESISTOR	4.7K 5% 1/4W	
	R 55	QRD161J-182	C RESISTOR	1.8K 5% 1/4W	
	R 56	QRD167J-332	C RESISTOR	3.3K 5% 1/4W	
	R 57	QRD161J-102	C RESISTOR	1.0K 5% 1/4W	
	R 60	QRD161J-102	C RESISTOR	1.0K 5% 1/4W	
	R 61	QRD161J-102	C RESISTOR	1.0K 5% 1/4W	

BLOCK NO. 02

⚠	REF.	PARTS NO.	PARTS NAME	REMARKS	SUFFIX
	R 64	QRD161J-473	C RESISTOR	47K 5% 1/4W	
	R 65	QRD161J-222	C RESISTOR	2.2K 5% 1/4W	
	R 66	QRD161J-222	C RESISTOR	2.2K 5% 1/4W	
	R 69	QRD161J-103	C RESISTOR	10K 5% 1/4W	
	R 70	QRD161J-393	C RESISTOR	39K 5% 1/4W	
	R 71	QRD161J-823	C RESISTOR	82K 5% 1/4W	
	R 72	QRD161J-122	C RESISTOR	1.2K 5% 1/4W	
	R 73	QRD161J-222	C RESISTOR	2.2K 5% 1/4W	
	R 74	QRD167J-332	C RESISTOR	3.3K 5% 1/4W	
	R 75	QRD161J-822	C RESISTOR	8.2K 5% 1/4W	
	R 76	QRD161J-102	C RESISTOR	1.0K 5% 1/4W	
	R 80	QRD161J-222	C RESISTOR	2.2K 5% 1/4W	
	R 82	QRD161J-102	C RESISTOR	1.0K 5% 1/4W	
	R 83	QRD161J-102	C RESISTOR	1.0K 5% 1/4W	
	R 84	QRD161J-103	C RESISTOR	10K 5% 1/4W	
	R 91	QRD161J-103	C RESISTOR	10K 5% 1/4W	
	R 101	QRD161J-114	C RESISTOR	110K 5% 1/4W	
	R 102	QRD161J-102	C RESISTOR	1.0K 5% 1/4W	
	R 103	QRD161J-101	C RESISTOR	100 5% 1/4W	
	R 104	QRD161J-393	C RESISTOR	39K 5% 1/4W	
	R 107	QRD161J-104	C RESISTOR	100K 5% 1/4W	
	R 108	QRD161J-362	C RESISTOR	3.6K 5% 1/4W	
	R 109	QRD161J-303Y	C RESISTOR	30K 5% 1/4W	
	R 110	QRD161J-184	C RESISTOR	180K 5% 1/4W	
	R 111	QRD161J-563	C RESISTOR	56K 5% 1/4W	
	R 112	QRD161J-102	C RESISTOR	1.0K 5% 1/4W	
	R 113	QRD161J-104	C RESISTOR	100K 5% 1/4W	
	R 114	QRD161J-105	C RESISTOR	1.0M 5% 1/4W	
	R 116	QRD167J-134	C RESISTOR	120K 5% 1/4W	
	R 117	QRD161J-152	C RESISTOR	2.2K 5% 1/4W	
	R 118	QRD161J-222	C RESISTOR	2.2K 5% 1/4W	
	R 119	QRD161J-103	C RESISTOR	10K 5% 1/4W	
	R 120	QRD161J-822	C RESISTOR	8.2K 5% 1/4W	
	R 122	QRD161J-221	C RESISTOR	220 5% 1/4W	
	R 123	QRD161J-474	C RESISTOR	470K 5% 1/4W	
	R 125	QRD161J-103	C RESISTOR	10K 5% 1/4W	
	R 130	QRD161J-334	C RESISTOR	180K 5% 1/4W	
	R 201	QRD161J-114	C RESISTOR	110K 5% 1/4W	
	R 202	QRD161J-102	C RESISTOR	1.0K 5% 1/4W	
	R 203	QRD161J-101	C RESISTOR	22K 5% 1/4W	
	R 204	QRD161J-333	C RESISTOR	33K 5% 1/4W	
	R 207	QRD161J-104	C RESISTOR	100K 5% 1/4W	
	R 208	QRD161J-362	C RESISTOR	3.6K 5% 1/4W	
	R 209	QRD161J-303Y	C RESISTOR	30K 5% 1/4W	
	R 210	QRD161J-184	C RESISTOR	180K 5% 1/4W	
	R 211	QRD161J-563	C RESISTOR	56K 5% 1/4W	
	R 212	QRD161J-102	C RESISTOR	1.0K 5% 1/4W	
	R 213	QRD161J-104	C RESISTOR	100K 5% 1/4W	
	R 214	QRD161J-105	C RESISTOR	1.0M 5% 1/4W	
	R 216	QRD167J-134	C RESISTOR	120K 5% 1/4W	
	R 217	QRD161J-152	C RESISTOR	2.2K 5% 1/4W	
	R 218	QRD161J-222	C RESISTOR	2.2K 5% 1/4W	
	R 219	QRD161J-103	C RESISTOR	10K 5% 1/4W	
	R 220	QRD161J-822	C RESISTOR	8.2K 5% 1/4W	
	R 222	QRD161J-221	C RESISTOR	220 5% 1/4W	

BLOCK NO. 02

⚠	REF.	PARTS NO.	PARTS NAME	REMARKS	SUFFIX
	R 223	QRD161J-103	C RESISTOR	10K 5% 1/4W	
	R 225	QRD161J-103	C RESISTOR	10K 5% 1/4W	
	R 230	QRD161J-334	C RESISTOR	180K 5% 1/4W	
	R 300	QRD161J-334	C RESISTOR	330K 5% 1/4W	
	R 301	QRD161J-473	C RESISTOR	47K 5% 1/4W	
	R 302	QRD161J-184	C RESISTOR	180K 5% 1/4W	
	R 303	QRD161J-224	C RESISTOR	220K 5% 1/4W	
	R 304	QRD161J-124	C RESISTOR	120K 5% 1/4W	
	R 305	QRD161J-102	C RESISTOR	1.0K 5% 1/4W	
	R 306	QRD161J-102	C RESISTOR	1.0K 5% 1/4W	
	R 307	QRD161J-222	C RESISTOR	2.2K 5% 1/4W	
	R 308	QRD161J-152	C RESISTOR	1.5K 5% 1/4W	
	R 309	QRD161J-101	C RESISTOR	100 5% 1/4W	
	R 310	QRD161J-223	C RESISTOR	22K 5% 1/4W	
	R 311	QRD161J-124	C RESISTOR	120K 5% 1/4W	
	R 313	QRD161J-302	C RESISTOR	3.0K 5% 1/4W	
	R 315	QRD161J-222	C RESISTOR	2.2K 5% 1/4W	
	R 316	QRD161J-334	C RESISTOR	330K 5% 1/4W	
	R 318	QRD161J-104	C RESISTOR	100K 5% 1/4W	
	R 320	QRD161J-104	C RESISTOR	100K 5% 1/4W	
	R 327	QRD161J-223	C RESISTOR	22K 5% 1/4W	
	R 328	QRD161J-223	C RESISTOR	22K 5% 1/4W	
	R 347	QRD161J-153	C RESISTOR	15K 5% 1/4W	
	R 348	QRD161J-472	C RESISTOR	4.7K 5% 1/4W	
	R 349	QRD161J-103	C RESISTOR	10K 5% 1/4W	
	R 350	QRD161J-223	C RESISTOR	22K 5% 1/4W	
	R 353	QRD161J-823	C RESISTOR	82K 5% 1/4W	
	R 354	QRD161J-823	C RESISTOR	82K 5% 1/4W	
	R 355	QRD161J-105	C RESISTOR	1.0M 5% 1/4W	
	R 356	QRD161J-105	C RESISTOR	1.0M 5% 1/4W	
	R 357	QRD161J-102	C RESISTOR	1.0K 5% 1/4W	
	R 358	QRD161J-102	C RESISTOR	1.0K 5% 1/4W	
	R 361	QRD167J-562	C RESISTOR	5.6K 5% 1/4W	
	R 380	QRD161J-225	C RESISTOR	2.2M 5% 1/4W	
	R 381	QRD161J-473	C RESISTOR	47K 5% 1/4W	
	R 382	QRD161J-220	C RESISTOR	22 5% 1/4W	
	R 383	QRD161J-104	C RESISTOR	100K 5% 1/4W	
	R 917	QRD161J-101	C RESISTOR	100 5% 1/4W	
	R 918	QRD161J-104	C RESISTOR	100K 5% 1/4W	
	R 919	QRD161J-390	C RESISTOR	39 5% 1/4W	
	R 920	QRD161J-102	C RESISTOR	1.0K 5% 1/4W	
	R 921	QRD161J-392	C RESISTOR	3.9K 5% 1/4W	
	R 922	QRD161J-103	C RESISTOR	10K 5% 1/4W	
	R 923	QRD161J-151	C RESISTOR	150 5% 1/4W	
	R 924	QRZ0077-220X	F.RES. I.M	22 1/0W	
	R 925	QRD161J-473	C RESISTOR	47K 5% 1/4W	
	R 926	QRD161J-561	C RESISTOR	560 5% 1/4W	
	R 927	QRD161J-223	C RESISTOR	22K 5% 1/4W	
	R 928	QRD167J-682	C RESISTOR	6.8K 5% 1/4W	
	R 929	QRD167J-332	C RESISTOR	3.3K 5% 1/4W	
	R 930	QRD167J-682	C RESISTOR	6.8K 5% 1/4W	
	R 979	QRD161J-471	C RESISTOR	470 5% 1/4W	
	R 980	QRD161J-104	C RESISTOR	100K 5% 1/4W	
	T 1	VQT7A21-113	IFT		
	TU 1	QAU0034-001	FRONT END		

BLOCK NO. 02

⚠	REF.	PARTS NO.	PARTS NAME	REMARKS	SUFFIX
	X 1	QAX0402-001	CRYSTAL		
	X 2	VCX5057-001	CRYSTAL		

■ System Micon & Operation Switch

BLOCK NO. 03

⚠	REF.	PARTS NO.	PARTS NAME	REMARKS	SUFFIX
	C 461	QER50JM-476	E.CAPA. I.M	47MF 20% 6.3V	
	C 462	QCGB1HK-102	C CAPACITOR	1000PF 10% 50V	
	C 463	QCVB1CN-103Y	C CAPACITOR	.010MF 30% 16V	
	C 464	QCVB1CN-103Y	C CAPACITOR	.010MF 30% 16V	
	C 701	QEK51HM-226	E.CAPA. I.M	22MF 20% 50V	
	C 702	QEK51HM-226	E.CAPA. I.M	22MF 20% 50V	
	C 703	QFV71HJ-124ZM	TF CAPACITOR	.12MF 5% 50V	
	C 704	QCBB1HK-151Y	C CAPACITOR	150PF 10% 50V	
	C 705	QCBB1HK-151Y	C CAPACITOR	150PF 10% 50V	
	C 708	QCBB1HK-151Y	C CAPACITOR	150PF 10% 50V	
	C 709	QCGB1HK-102	C CAPACITOR	1000PF 10% 50V	
	C 713	QCGB1HK-102	C CAPACITOR	1000PF 10% 50V	
	C 714	QCGB1HK-102	C CAPACITOR	1000PF 10% 50V	
	C 715	QER61CM-106Z	E CAPACITOR	10MF 20% 16V	
	C 716	QER61HM-105Z	E CAPACITOR	1.0MF 20% 50V	
	C 717	QETN1AM-108Z	E CAPACITOR	1000MF 20% 10V	
	C 718	QEK60JM-107ZM	E CAPACITOR	100MF 20% 6.3V	
	C 719	QCGB1HK-102	C CAPACITOR	1000PF 10% 50V	
	C 720	QCSB1HJ-220Y	C CAPACITOR	22PF 5% 50V	
	C 721	QCSB1HJ-220Y	C CAPACITOR	22PF 5% 50V	
	C 722	QCGB1HK-102	C CAPACITOR	1000PF 10% 50V	
	C 723	QCSB1HJ-390Y	C CAPACITOR	39PF 5% 50V	
	C 724	QCSB1HJ-180Y	C CAPACITOR	18PF 5% 50V	
	C 725	QCSB1HJ-220Y	C CAPACITOR	22PF 5% 50V	
	C 726	QCSB1HJ-390Y	C CAPACITOR	39PF 5% 50V	
	C 727	QCGB1HK-102	C CAPACITOR	1000PF 10% 50V	
	C 728	QCGB1HK-102	C CAPACITOR	1000PF 10% 50V	
	C 730	QCGB1HK-102	C CAPACITOR	1000PF 10% 50V	
	C 731	QCBB1HK-101Y	C CAPACITOR	100PF 10% 50V	
	C 735	QEK51AM-476	E CAPACITOR	47MF 20% 16V	
	C 737	QCBB1HK-151Y	C CAPACITOR	150PF 10% 50V	
	C 739	QCVB1CN-103Y	C CAPACITOR	.010MF 30% 16V	
	C 740	QCVB1CN-103Y	C CAPACITOR	.010MF 30% 16V	
	C 840	QCGB1HK-102	C CAPACITOR	1000PF 10% 50V	
	C 841	QCGB1HK-102	C CAPACITOR	1000PF 10% 50V	
	C 842	QCGB1HK-102	C CAPACITOR	1000PF 10% 50V	
	C 843	QCGB1HK-102	C CAPACITOR	1000PF 10% 50V	
	C 844	QCGB1HK-102	C CAPACITOR	1000PF 10% 50V	
	C 845	QCGB1HK-102	C CAPACITOR	1000PF 10% 50V	
	C 846	QCGB1HK-102	C CAPACITOR	1000PF 10% 50V	
	CN700	VMC0163-R11	CONNECTOR		
	CN701	VMC0163-R13	CONNECTOR		
	CN702	VMC0163-R17	CONNECTOR		
	D 412	SLR-342MCA47	LED I.M		
	D 413	SLR-342MCA47	LED I.M		
	D 414	SLR-342MCA47	LED I.M		
	D 415	SLR-342MCA47	LED I.M		
	D 701	1SS133-T2	DIODE		
	D 702	1SS133-T2	DIODE		
	D 703	1SS133-T2	DIODE		
	D 704	1SS133-T2	DIODE		
	D 705	MTZ5.1JAT-77	ZENER DIODE		
	D 706	1SS133-T2	DIODE		
	D 707	SLR-342VC-T	LED I.M		
	FL701	QLF0047-001	FL TUBE		

BLOCK NO. 03

⚠	REF.	PARTS NO.	PARTS NAME	REMARKS	SUFFIX
	FW701	VWSC06-103K3K	FLAT WIRE		
	FW702	VWSC06-103K3K	FLAT WIRE		
	FW851	EWR35D-39LS	FLAT WIRE		
	IC404	GP1U261X	IR DETECT UNIT		
	IC701	UPD78044FGF-067	IC		
	J 850	QNS0032-001	JACK		
	JS701	QSW0538-001	ROTARY ENCODER		
	L 701	VQP0026-470Z	INDUCTOR		
	L 702	VQP0026-470Z	INDUCTOR		
	L 703	QQL29BJ-100Z	INDUCTOR		
	L 704	VQP0018-4R7	INDUCTOR		
	L 705	VQP0018-4R7	INDUCTOR		
	L 706	QQL29BJ-100Z	INDUCTOR		
	L 707	QQL29BJ-100Z	INDUCTOR		
	L 708	VQP0018-220	INDUCTOR		
	L 709	VQZ0048-009	INDUCTOR		
	L 840	EQL4007-2R2T	INDUCTOR I.M		
	L 841	VQP0018-470	INDUCTOR		
	L 842	VQP0018-470	INDUCTOR		
	Q 470	DTC114ESA-T	D.TR.I.M		
	Q 471	DTC114ESA-T	D.TR.I.M		
	Q 472	DTA114ES	D.TR.I.M		
	Q 473	DTA114ES	D.TR.I.M		
	Q 474	DTC114ESA-T	D.TR.I.M		
	Q 703	2SC2785	TRANSISTOR		
	Q 704	DTC114TSA-T	D.TR.I.M		
	Q 705	2SA1175	TR.I.M		
	Q 706	2SC2668(O)	TRANSISTOR		
	Q 707	2SC2668(O)	TRANSISTOR		
	Q 708	2SC2785	TRANSISTOR		
	Q 709	2SC2785	TRANSISTOR		
	Q 711	2SD2144S(VW)	TRANSISTOR		
	Q 771	2SC945A	TRANSISTOR		
	Q 772	2SC945A	TRANSISTOR		
	Q 773	2SC945A	TRANSISTOR		
	Q 774	DTC114ESA-T	D.TR.I.M		
	R 470	QRD161J-202	C RESISTOR	2.0K 5% 1/4W	
	R 471	QRD161J-752	C RESISTOR	7.5K 5% 1/4W	
	R 472	QRD161J-392	C RESISTOR	3.9K 5% 1/4W	
	R 473	QRD167J-562	C RESISTOR	5.6K 5% 1/4W	
	R 474	QRD161J-103	C RESISTOR	10K 5% 1/4W	
	R 475	QRD161J-183	C RESISTOR	18K 5% 1/4W	
	R 476	QRD161J-122	C RESISTOR	1.2K 5% 1/4W	
	R 477	QRD161J-152	C RESISTOR	1.5K 5% 1/4W	
	R 478	QRD161J-222	C RESISTOR	2.2K 5% 1/4W	
	R 479	QRD161J-473	C RESISTOR	47K 5% 1/4W	
	R 480	QRD161J-392	C RESISTOR	3.9K 5% 1/4W	
	R 481	QRD167J-562	C RESISTOR	5.6K 5% 1/4W	
	R 482	QRD161J-103	C RESISTOR	10K 5% 1/4W	
	R 483	QRD161J-183	C RESISTOR	18K 5% 1/4W	
	R 484	QRD161J-473	C RESISTOR	47K 5% 1/4W	
	R 485	QRD161J-272	C RESISTOR	2.7K 5% 1/4W	
	R 486	QRD161J-271	C RESISTOR	270 5% 1/4W	
	R 487	QRD161J-271	C RESISTOR	270 5% 1/4W	
	R 488	QRD167J-121	C RESISTOR	120 5% 1/4W	

BLOCK NO. 03

⚠	REF.	PARTS NO.	PARTS NAME	REMARKS	SUFFIX
	R 489	QRD167J-121	C RESISTOR	120 5% 1/4W	
	R 490	QRD161J-472	C RESISTOR	4.7K 5% 1/4W	
	R 690	QRD161J-102	C RESISTOR	1.0K 5% 1/4W	
	R 691	QRD161J-102	C RESISTOR	1.0K 5% 1/4W	
	R 692	QRD161J-122	C RESISTOR	1.2K 5% 1/4W	
	R 693	QRD161J-152	C RESISTOR	1.5K 5% 1/4W	
	R 694	QRD161J-222	C RESISTOR	2.2K 5% 1/4W	
	R 695	QRD161J-272	C RESISTOR	2.7K 5% 1/4W	
	R 696	QRD161J-392	C RESISTOR	3.9K 5% 1/4W	
	R 697	QRD167J-562	C RESISTOR	5.6K 5% 1/4W	
	R 698	QRD161J-183	C RESISTOR	75K 5% 1/4W	
	R 699	QRD161J-103	C RESISTOR	10K 5% 1/4W	
	R 700	QRD161J-103	C RESISTOR	10K 5% 1/4W	
	R 701	QRD161J-222	C RESISTOR	2.2K 5% 1/4W	
	R 702	QRD161J-222	C RESISTOR	2.2K 5% 1/4W	
	R 703	QRD161J-222	C RESISTOR	2.2K 5% 1/4W	
	R 704	QRD161J-222	C RESISTOR	2.2K 5% 1/4W	
	R 705	QRD161J-222	C RESISTOR	2.2K 5% 1/4W	
	R 707	QRD161J-102	C RESISTOR	1.0K 5% 1/4W	
	R 708	QRD161J-222	C RESISTOR	2.2K 5% 1/4W	
	R 709	QRD161J-222	C RESISTOR	2.2K 5% 1/4W	
	R 710	QRD161J-222	C RESISTOR	2.2K 5% 1/4W	
	R 711	QRD161J-222	C RESISTOR	2.2K 5% 1/4W	
	R 712	QRD161J-222	C RESISTOR	2.2K 5% 1/4W	
	R 713	QRD161J-222	C RESISTOR	2.2K 5% 1/4W	
	R 714	QRD161J-222	C RESISTOR	2.2K 5% 1/4W	
	R 715	QRD161J-222	C RESISTOR	2.2K 5% 1/4W	
	R 716	QRD161J-222	C RESISTOR	2.2K 5% 1/4W	
	R 717	QRD161J-222	C RESISTOR	2.2K 5% 1/4W	
	R 718	QRD161J-222	C RESISTOR	2.2K 5% 1/4W	
	R 719	QRD161J-222	C RESISTOR	2.2K 5% 1/4W	
	R 720	QRD161J-222	C RESISTOR	2.2K 5% 1/4W	
	R 721	QRD161J-102	C RESISTOR	1.0K 5% 1/4W	
	R 722	QRD161J-222	C RESISTOR	2.2K 5% 1/4W	
	R 723	QRD161J-222	C RESISTOR	2.2K 5% 1/4W	
	R 724	QRD161J-222	C RESISTOR	2.2K 5% 1/4W	
	R 725	QRD161J-222	C RESISTOR	2.2K 5% 1/4W	
	R 726	QRD161J-222	C RESISTOR	2.2K 5% 1/4W	
	R 727	QRD161J-102	C RESISTOR	1.0K 5% 1/4W	
	R 728	QRD161J-222	C RESISTOR	2.2K 5% 1/4W	
	R 729	QRD161J-102	C RESISTOR	1.0K 5% 1/4W	
	R 730	QRD161J-222	C RESISTOR	2.2K 5% 1/4W	
	R 731	QRD161J-102	C RESISTOR	1.0K 5% 1/4W	
	R 732	QRD161J-222	C RESISTOR	2.2K 5% 1/4W	
	R 733	QRD161J-222	C RESISTOR	2.2K 5% 1/4W	
	R 736	QRD161J-222	C RESISTOR	2.2K 5% 1/4W	
	R 737	QRD161J-222	C RESISTOR	2.2K 5% 1/4W	
	R 738	QRD161J-224	C RESISTOR	220K 5% 1/4W	
	R 739	QRD161J-103	C RESISTOR	10K 5% 1/4W	
	R 740	QRD161J-224	C RESISTOR	220K 5% 1/4W	
	R 741	QRD161J-103	C RESISTOR	10K 5% 1/4W	
	R 742	QRD161J-224	C RESISTOR	220K 5% 1/4W	
	R 743	QRD161J-103	C RESISTOR	10K 5% 1/4W	
	R 744	QRD161J-103	C RESISTOR	10K 5% 1/4W	
	R 745	QRD161J-473	C RESISTOR	47K 5% 1/4W	

BLOCK NO. 03

⚠	REF.	PARTS NO.	PARTS NAME	REMARKS	SUFFIX
	R 747	QRD161J-102	C RESISTOR	1.0K 5% 1/4W	
	R 748	QRD161J-103	C RESISTOR	10K 5% 1/4W	
	R 750	QRD161J-103	C RESISTOR	10K 5% 1/4W	
	R 752	QRD161J-103	C RESISTOR	10K 5% 1/4W	
	R 753	QRD161J-222	C RESISTOR	2.2K 5% 1/4W	
	R 754	QRD161J-472	C RESISTOR	4.7K 5% 1/4W	
	R 755	QRD161J-823	C RESISTOR	82K 5% 1/4W	
	R 756	QRD161J-823	C RESISTOR	82K 5% 1/4W	
	R 757	QRD161J-103	C RESISTOR	10K 5% 1/4W	
	R 758	QRD161J-103	C RESISTOR	10K 5% 1/4W	
	R 759	QRD161J-273	C RESISTOR	27K 5% 1/4W	
	R 760	QRD161J-563	C RESISTOR	56K 5% 1/4W	
	R 761	QRD161J-103	C RESISTOR	10K 5% 1/4W	
	R 762	QRD161J-104	C RESISTOR	100K 5% 1/4W	
	R 764	QRD161J-273	C RESISTOR	27K 5% 1/4W	
	R 765	QRD161J-331	C RESISTOR	330 5% 1/4W	
	R 766	QRD161J-102	C RESISTOR	1.0K 5% 1/4W	
	R 767	QRD161J-102	C RESISTOR	1.0K 5% 1/4W	
	R 768	QRD161J-222	C RESISTOR	2.2K 5% 1/4W	
	R 769	QRD161J-222	C RESISTOR	2.2K 5% 1/4W	
	R 770	QRD161J-223	C RESISTOR	22K 5% 1/4W	
	R 771	QRD161J-223	C RESISTOR	22K 5% 1/4W	
	R 772	QRD161J-103	C RESISTOR	10K 5% 1/4W	
	R 773	QRD161J-103	C RESISTOR	10K 5% 1/4W	
	R 774	QRD161J-472	C RESISTOR	4.7K 5% 1/4W	
	R 775	QRD161J-331	C RESISTOR	330 5% 1/4W	
	R 776	QRD161J-103	C RESISTOR	10K 5% 1/4W	
	R 777	QRD161J-102	C RESISTOR	1.0K 5% 1/4W	
	R 778	QRD161J-224	C RESISTOR	220K 5% 1/4W	
	R 779	QRD161J-105	C RESISTOR	1.0M 5% 1/4W	
	R 780	QRD161J-472	C RESISTOR	4.7K 5% 1/4W	
	R 781	QRD161J-822	C RESISTOR	8.2K 5% 1/4W	
	R 782	QRD161J-822	C RESISTOR	8.2K 5% 1/4W	
	R 783	QRD161J-472	C RESISTOR	4.7K 5% 1/4W	
	R 784	QRD161J-222	C RESISTOR	2.2K 5% 1/4W	
	R 785	QRD161J-103	C RESISTOR	10K 5% 1/4W	
	R 786	QRD161J-103	C RESISTOR	10K 5% 1/4W	
	R 787	QRD161J-103	C RESISTOR	10K 5% 1/4W	
	R 788	QRD161J-222	C RESISTOR	2.2K 5% 1/4W	
	R 789	QRD161J-222	C RESISTOR	2.2K 5% 1/4W	
	R 790	QRD161J-222	C RESISTOR	2.2K 5% 1/4W	
	R 791	QRD161J-102	C RESISTOR	1.0K 5% 1/4W	
	R 792	QRD161J-102	C RESISTOR	1.0K 5% 1/4W	
	R 793	QRD161J-102	C RESISTOR	1.0K 5% 1/4W	
	R 794	QRD161J-222	C RESISTOR	2.2K 5% 1/4W	
	R 795	QRD161J-152	C RESISTOR	1.5K 5% 1/4W	
	R 796	QRD161J-222	C RESISTOR	2.2K 5% 1/4W	
	R 799	QRD161J-301	C.RES. I.M	300 5% 1/4W	
	R 800	QRD161J-103	C RESISTOR	10K 5% 1/4W	
	R 802	QRD161J-472	C RESISTOR	4.7K 5% 1/4W	
	R 803	QRD161J-473	C RESISTOR	47K 5% 1/4W	
	R 804	QRD161J-823	C RESISTOR	82K 5% 1/4W	
	R 805	QRD161J-823	C RESISTOR	82K 5% 1/4W	
	R 806	QRD161J-394	C RESISTOR	390K 5% 1/4W	
	R 807	QRD161J-394	C RESISTOR	390K 5% 1/4W	

BLOCK NO. 03

⚠	REF.	PARTS NO.	PARTS NAME	REMARKS	SUFFIX
	R 808	QRD161J-104	C RESISTOR	100K 5% 1/4W	
	R 809	QRD161J-104	C RESISTOR	100K 5% 1/4W	
	RA700	QRB139J-224	NET RESISTOR	220K 5% 1/3W	
	RA701	QRB149J-224	R.NETWORK	220K 5% 1/4W	
	S 400	QSW0674-001Z	TACT SW		
	S 401	QSW0674-001Z	TACT SW		
	S 402	QSW0674-001Z	TACT SW		
	S 403	QSW0674-001Z	TACT SW		
	S 404	QSW0674-001Z	TACT SW		
	S 405	QSW0674-001Z	TACT SW		
	S 406	QSW0674-001Z	TACT SW		
	S 407	QSW0674-001Z	TACT SW		
	S 408	QSW0674-001Z	TACT SW		
	S 409	QSW0674-001Z	TACT SW		
	S 415	QSW0674-001Z	TACT SW		
	S 422	QSW0674-001Z	TACT SW		
	S 423	QSW0674-001Z	TACT SW		
	S 424	QSW0674-001Z	TACT SW		
	S 425	QSW0674-001Z	TACT SW		
	S 426	QSW0674-001Z	TACT SW		
	S 700	QSW0674-001Z	TACT SW		
	S 701	QSW0674-001Z	TACT SW		
	S 702	QSW0674-001Z	TACT SW		
	S 703	QSW0674-001Z	TACT SW		
	S 704	QSW0674-001Z	TACT SW		
	S 705	QSW0674-001Z	TACT SW		
	S 706	QSW0674-001Z	TACT SW		
	S 707	QSW0674-001Z	TACT SW		
	S 708	QSW0674-001Z	TACT SW		
	S 709	QSW0674-001Z	TACT SW		
	S 710	QSW0674-001Z	TACT SW		
	S 711	QSW0674-001Z	TACT SW		
	S 712	QSW0674-001Z	TACT SW		
	S 713	QSW0674-001Z	TACT SW		
	SP701	VYH7653-001	IC HOLDER		
	X 701	QAX0401-001	CRYSTAL		
	X 702	QAX0410-001Z	CERA LOCK		

■ CD Servo Control

BLOCK NO. 04

⚠	REF.	PARTS NO.	PARTS NAME	REMARKS	SUFFIX
	C 604	QEK61AM-107ZM	E CAPACITOR	100MF 20% 10V	
	C 605	EETB1EM-106E	E.CAPA. I.M		
	C 606	QCGB1HK-102	C CAPACITOR	1000PF 10% 50V	
	C 607	QCGB1HK-102	C CAPACITOR	1000PF 10% 50V	
	C 608	EETB1HM-105E	E.CAPA. I.M		
	C 609	QCBB1HK-101Y	C.CAPACITOR	100PF 10% 50V	
	C 610	QFLC1HJ-273ZM	M CAPACITOR	.027MF 5% 50V	
	C 611	QCXB1CM-222Y	C CAPACITOR	2200PF 20% 16V	
	C 612	QCVB1CN-103Y	C CAPACITOR	.010MF 30% 16V	
	C 613	QCBB1HK-331Y	C.CAPACITOR	330PF 10% 50V	
	C 614	QFLC1HJ-104ZM	M CAPACITOR	.10MF 5% 50V	
	C 615	QCFB1HZ-223	C CAP I M	.022MF +80:-20% 50V	
	C 616	QCFB1HZ-223	C CAP I M	.022MF +80:-20% 50V	
	C 617	QCFB1HZ-223	C CAP I M	.022MF +80:-20% 50V	
	C 618	QCXB1CM-222Y	C CAPACITOR	2200PF 20% 16V	
	C 619	QCBB1HK-271Y	C.CAPACITOR	270PF 10% 50V	
	C 620	QCSB1HJ-470Y	C.CAPACITOR	47PF 5% 50V	
	C 621	QCBB1HK-821Y	C CAPACITOR	820PF 10% 50V	
	C 622	EETB1AM-476E	E.CAPA. I.M		
	C 623	QFLC1HJ-104ZM	M CAPACITOR	.10MF 5% 50V	
	C 628	QCC11EM-473V	C CAPACITOR	.047MF 20% 25V	
	C 629	EETB1AM-107E	E.CAPA. I.M		
	C 631	QETN1AM-477Z	E CAPACITOR	470MF 20% 10V	
	C 632	QEK61AM-107ZM	E CAPACITOR	100MF 20% 10V	
	C 651	QCSB1HJ-120Y	C.CAPACITOR	12PF 5% 50V	
	C 652	QCSB1HJ-150Y	C.CAPACITOR	15PF 5% 50V	
	C 653	QCFB1HZ-223	C CAP I M	.022MF +80:-20% 50V	
	C 655	QCC11EM-473V	C CAPACITOR	.047MF 20% 25V	
	C 661	QCBB1HK-471Y	C.CAPACITOR	470PF 10% 50V	
	C 662	QCFB1HZ-223	C CAP I M	.022MF +80:-20% 50V	
	C 663	QFLC1HJ-223ZM	M CAPACITOR	.022MF 5% 50V	
	C 664	QCFB1HZ-223	C CAP I M	.022MF +80:-20% 50V	
	C 665	QFV71HJ-334ZM	FILM CAPACITOR	.33MF 5% 50V	
	C 671	QCXB1CM-222Y	C CAPACITOR	2200PF 20% 16V	
	C 672	QCXB1CM-222Y	C CAPACITOR	2200PF 20% 16V	
	C 673	QETN1AM-227Z	E CAPACITOR	220MF 20% 10V	
	C 674	QCFB1HZ-223	C CAP I M	.022MF +80:-20% 50V	
	C 675	QCGB1HK-102	C CAPACITOR	1000PF 10% 50V	
	C 676	QCGB1HK-102	C CAPACITOR	1000PF 10% 50V	
	C 691	QCBB1HK-151Y	C CAPACITOR	150PF 10% 50V	
	C 692	QCBB1HK-151Y	C CAPACITOR	150PF 10% 50V	
	C 693	QCBB1HK-151Y	C CAPACITOR	150PF 10% 50V	
	C 694	QCBB1HK-151Y	C CAPACITOR	150PF 10% 50V	
	C 698	QCGB1HK-102	C CAPACITOR	1000PF 10% 50V	
	CN601	QGF1008F1-15	21-41 CONNECTOR		
	CN602	VMC0075-006	6P PLUG ASSY		
	CN603	VMC0163-R07	CONNECTOR		
	CN604	VMC0163-R11	CONNECTOR		
	CN605	VMC0041-003	CONNECTOR		
	D 661	1SS133	SI DIODE		
	IC601	AN8806SB	IC		
	IC602	BA6897FP-W	IC		
	IC603	MN35510	IC		
	Q 601	2SA952(L,K)	TRANSISTOR		
	Q 631	2SA952(L,K)	TRANSISTOR		

BLOCK NO. 04

⚠	REF.	PARTS NO.	PARTS NAME	REMARKS	SUFFIX
	R 601	QRD161J-123	C RESISTOR	12K 5% 1/4W	
	R 603	QRD161J-125	C.RES. I.M	1.2M 5% 1/4W	
	R 605	QRD167J-134	C.RES. I.M	130K 5% 1/4W	
	R 606	QRD161J-913	C.RES. I.M	91K 5% 1/4W	
	R 607	QRD161J-273	C RESISTOR	27K 5% 1/4W	
	R 609	QRD161J-114	C.RES. I.M	110K 5% 1/4W	
	R 610	QRD161J-154	C RESISTOR	150K 5% 1/4W	
	R 612	QRD161J-103	C RESISTOR	10K 5% 1/4W	
	R 613	QRD167J-121	C RESISTOR	120 5% 1/4W	
	R 614	QRD161J-100	C RESISTOR	10 5% 1/4W	
	R 615	QRD161J-120	C RESISTOR	12 5% 1/4W	
	R 616	QRD161J-910Y	C RESISTOR	91 5% 1/4W	
	R 621	QRD161J-330	C RESISTOR	33 5% 1/4W	
	R 622	QRD161J-330	C RESISTOR	33 5% 1/4W	
	R 623	QRD161J-330	C RESISTOR	33 5% 1/4W	
	R 631	QRD161J-331	C RESISTOR	330 5% 1/4W	
	R 632	QRD161J-101	C RESISTOR	100 5% 1/4W	
	R 633	QRD161J-273	C RESISTOR	27K 5% 1/4W	
	R 641	QRD161J-563	C RESISTOR	56K 5% 1/4W	
	R 642	QRD161J-123	C RESISTOR	12K 5% 1/4W	
	R 643	QRD161J-822	C RESISTOR	8.2K 5% 1/4W	
	R 644	QRD161J-223	C RESISTOR	22K 5% 1/4W	
	R 645	QRD161J-223	C RESISTOR	22K 5% 1/4W	
	R 646	QRD161J-182	C RESISTOR	1.8K 5% 1/4W	
	R 647	QRD167J-562	C RESISTOR	5.6K 5% 1/4W	
	R 651	QRD161J-102	C RESISTOR	1.0K 5% 1/4W	
	R 652	QRD161J-102	C RESISTOR	1.0K 5% 1/4W	
	R 653	QRD161J-471	C RESISTOR	470 5% 1/4W	
	R 654	QRD161J-102	C RESISTOR	1.0K 5% 1/4W	
	R 655	QRD161J-471	C RESISTOR	470 5% 1/4W	
	R 659	QRD161J-471	C RESISTOR	470 5% 1/4W	
	R 661	QRD161J-104	C RESISTOR	100K 5% 1/4W	
	R 663	QRD161J-124	C RESISTOR	120K 5% 1/4W	
	R 664	QRD161J-681	C RESISTOR	680 5% 1/4W	
	R 666	QRD161J-220	C RESISTOR	22 5% 1/4W	
	R 671	QRD161J-102	C RESISTOR	1.0K 5% 1/4W	
	R 672	QRD161J-102	C RESISTOR	1.0K 5% 1/4W	
	X 651	VCX5016-934V	CRYSTAL		

■ CD Select Switch

BLOCK NO. 05

⚠	REF.	PARTS NO.	PARTS NAME	REMARKS	SUFFIX
	CN804	QGB2016J1-07	CONNECTOR		
	SW 1	QSW0507-001	SWITCH		
	SW 2	QSW0507-001	SWITCH		
	SW 3	QSW0507-001	SWITCH		
	SW 4	QSW0507-001	SWITCH		
	SW 5	QSW0507-001	SWITCH		
	SW 6	QSW0507-001	SWITCH		

■ Changer Control

BLOCK NO. 06

⚠	REF.	PARTS NO.	PARTS NAME	REMARKS	SUFFIX
	C 801	QEK61AM-107ZM	E CAPACITOR	100MF 20% 10V	
	C 802	QEK61EM-475ZM	E CAPACITOR	4.7MF 20% 25V	
	C 803	QFLB1HJ-102	M CAPACITOR	1000PF 5% 50V	
	C 804	QCFB1HZ-104Y	C CAPACITOR	.10MF +80:-20%	
	C 805	QCVB1CN-103Y	C CAPACITOR	.010MF 30% 16V	
	C 806	QEK61CM-476	E CAPACITOR	47MF 20% 16V	
	C 807	QEK61CM-476	E CAPACITOR	47MF 20% 16V	
	C 808	QFLB1HJ-102	M CAPACITOR	1000PF 5% 50V	
	C 810	QCZ0205-155	ML C CAPACITOR	1.5MF	
	C 811	QCZ0205-155	ML C CAPACITOR	1.5MF	
	C 813	QCVB1CN-103Y	C CAPACITOR	.010MF 30% 16V	
	C 821	QCGB1HK-102	C CAPACITOR	1000PF 10% 50V	
	CN801	VMC0163-R10	CONNECTOR	TO MICON	
	CN802	VMC0289-P07	CONNECTOR	TO SWITCH PWB	
	CN803	VMC0324-12310	CONNECTOR	TO CAM SW PWB	
	IC801	UPD65612GB-208	IC		
	IC802	TA8409S	IC		
	IC803	TA8409S	IC		
	L 801	VQP0018-100	INDUCTOR		
	L 802	VQP0033-100Z	INDUCTOR		
	L 803	VQP0033-100Z	INDUCTOR		
	L 804	VQP0033-100Z	INDUCTOR		
	R 805	QRD161J-102	C RESISTOR	1.0K 5% 1/4W	
	R 806	QRD161J-471	C RESISTOR	470 5% 1/4W	
	R 807	QRD161J-471	C RESISTOR	470 5% 1/4W	
	R 808	QRD161J-102	C RESISTOR	1.0K 5% 1/4W	
	R 810	QRD161J-684	C RESISTOR	680K 5% 1/4W	
	R 811	QRD161J-105	C RESISTOR	1.0M 5% 1/4W	
	R 813	QRD161J-102	C RESISTOR	1.0K 5% 1/4W	
	R 814	QRD161J-102	C RESISTOR	1.0K 5% 1/4W	
	R 815	QRD161J-102	C RESISTOR	1.0K 5% 1/4W	
	R 816	QRD161J-102	C RESISTOR	1.0K 5% 1/4W	
	R 817	QRD161J-102	C RESISTOR	1.0K 5% 1/4W	
	R 818	QRD161J-102	C RESISTOR	1.0K 5% 1/4W	
	R 819	QRD161J-102	C RESISTOR	1.0K 5% 1/4W	
	R 820	QRD161J-102	C RESISTOR	1.0K 5% 1/4W	
	R 821	QRD161J-102	C RESISTOR	1.0K 5% 1/4W	
	R 822	QRD161J-102	C RESISTOR	1.0K 5% 1/4W	
	R 823	QRD161J-102	C RESISTOR	1.0K 5% 1/4W	
	R 824	QRD161J-102	C RESISTOR	1.0K 5% 1/4W	
	R 825	QRD161J-102	C RESISTOR	1.0K 5% 1/4W	
	R 826	QRD161J-102	C RESISTOR	1.0K 5% 1/4W	
	R 827	QRD161J-102	C RESISTOR	1.0K 5% 1/4W	
	R 828	QRD161J-102	C RESISTOR	1.0K 5% 1/4W	
	R 829	QRD161J-102	C RESISTOR	1.0K 5% 1/4W	
	R 830	QRD161J-102	C RESISTOR	1.0K 5% 1/4W	
	R 832	QRD161J-181	C RESISTOR	180 5% 1/4W	
	R 833	QRD161J-102	C RESISTOR	1.0K 5% 1/4W	
	R 834	QRD161J-102	C RESISTOR	1.0K 5% 1/4W	
	R 839	QRD167J-332	C RESISTOR	3.3K 5% 1/4W	
	R 840	QRD167J-562	C RESISTOR	5.6K 5% 1/4W	

■ Head Amplifier & Mechanism Control

BLOCK NO. 07

⚠	REF.	PARTS NO.	PARTS NAME	REMARKS	SUFFIX
	C 101	NCS21HJ-561AY	C.CAPA. C.M	560PF 5% 50V	
	C 102	NCS21HJ-331AY	C CAPACITOR	330PF 5% 50V	
	C 103	NCS21HJ-561AY	C.CAPA. C.M	560PF 5% 50V	
	C 104	NCS21HJ-221AY	C CAPACITOR	220PF 5% 50V	
	C 105	QEK40JM-227	E CAPACITOR	220MF 20% 6.3V	
	C 106	NCB21HK-333AY	C CAPACITOR	.033MF 10% 50V	
	C 107	QEK41EM-475	E CAPACITOR	4.7MF 20% 25V	
	C 108	NCB21HK-393AY	C CAPACITOR	.039MF 10% 50V	
	C 109	NCB21HK-563AY	C CAPACITOR	.056MF 10% 50V	
	C 110	NCS21HJ-221AY	C CAPACITOR	220PF 5% 50V	
	C 111	QEK41HM-104	E CAPACITOR	.10MF 20% 50V	
	C 112	QEK41CM-106	E CAPACITOR	10MF 20% 16V	
	C 113	NCB21HK-332AY	C CAPACITOR	3300PF 10% 50V	
	C 114	QEK41EM-475	E CAPACITOR	4.7MF 20% 25V	
	C 115	NCB21HK-153AY	C CAPACITOR	.015MF 10% 50V	
	C 116	NCB21HK-822AY	C CAPACITOR	8200PF 10% 50V	
	C 117	NCB21HK-223AY	C CAPACITOR	.022MF 10% 50V	
	C 118	NCB21HK-103AY	C CAPACITOR	.010MF 10% 50V	
	C 119	NCB21HK-563AY	C CAPACITOR	.056MF 10% 50V	
	C 120	NCS21HJ-330AY	C CAPACITOR	33PF 5% 50V	
	C 201	NCS21HJ-561AY	C.CAPA. C.M	560PF 5% 50V	
	C 202	NCS21HJ-331AY	C CAPACITOR	330PF 5% 50V	
	C 203	NCS21HJ-561AY	C.CAPA. C.M	560PF 5% 50V	
	C 204	NCS21HJ-221AY	C CAPACITOR	220PF 5% 50V	
	C 205	QEK40JM-227	E CAPACITOR	220MF 20% 6.3V	
	C 206	NCB21HK-333AY	C CAPACITOR	.033MF 10% 50V	
	C 207	QEK41EM-475	E CAPACITOR	4.7MF 20% 25V	
	C 208	NCB21HK-393AY	C CAPACITOR	.039MF 10% 50V	
	C 209	NCB21HK-563AY	C CAPACITOR	.056MF 10% 50V	
	C 210	NCS21HJ-221AY	C CAPACITOR	220PF 5% 50V	
	C 211	QEK41HM-104	E CAPACITOR	.10MF 20% 50V	
	C 212	QEK41CM-106	E CAPACITOR	10MF 20% 16V	
	C 213	NCB21HK-332AY	C CAPACITOR	3300PF 10% 50V	
	C 214	QEK41EM-475	E CAPACITOR	4.7MF 20% 25V	
	C 215	NCB21HK-153AY	C CAPACITOR	.015MF 10% 50V	
	C 216	NCB21HK-822AY	C CAPACITOR	8200PF 10% 50V	
	C 217	NCB21HK-223AY	C CAPACITOR	.022MF 10% 50V	
	C 218	NCB21HK-103AY	C CAPACITOR	.010MF 10% 50V	
	C 219	NCB21HK-563AY	C CAPACITOR	.056MF 10% 50V	
	C 220	NCS21HJ-330AY	C CAPACITOR	33PF 5% 50V	
	C 301	QEK41CM-106	E CAPACITOR	10MF 20% 16V	
	C 302	QEK41CM-476	E CAPACITOR	47MF 20% 16V	
	C 303	QEK41CM-226	E CAPACITOR	22MF 20% 16V	
	C 304	QEK41EM-475	E CAPACITOR	4.7MF 20% 25V	
	C 305	NCB21HK-393AY	C CAPACITOR	.039MF 10% 50V	
	C 306	QEK40JM-227	E CAPACITOR	220MF 20% 6.3V	
	C 308	NCB21HK-562AY	C CAPACITOR	5600PF 10% 50V	
	C 309	NCB21HK-562AY	C CAPACITOR	5600PF 10% 50V	
	C 310	NCB21HK-223AY	C CAPACITOR	.022MF 10% 50V	
	C 311	NCB21HK-682AY	C.CAPA., C.M	6800PF 10% 50V	
	C 313	QEKF1AM-107ZN	E CAPACITOR	100MF 20% 10V	
	C 314	QCZ0205-155	ML C CAP I/M	1.5MF	
	C 315	QCZ0205-155	ML C CAP I/M	1.5MF	
	C 316	QFG32AJ-103ZN	PP CAPACITOR	.010MF 5% 100V	
	C 318	NCB21HK-103AY	C CAPACITOR	.010MF 10% 50V	

BLOCK NO. 07

⚠	REF.	PARTS NO.	PARTS NAME	REMARKS	SUFFIX
	C 319	QFG32AJ-821ZN	TF CAPACITOR	820PF 5% 100V	
	C 321	NCB21HK-103AY	C CAPACITOR	.010MF 10% 50V	
	C 322	QFG32AJ-152ZN	M CAPACITOR	1500PF 5% 100V	
	C 327	QEK41CM-476	E CAPACITOR	47MF 20% 16V	
	C 328	NCS21HJ-151AY	C CAPACITOR	150PF 5% 50V	
	C 329	NCS21HJ-151AY	C CAPACITOR	150PF 5% 50V	
	C 330	NCS21HJ-151AY	C CAPACITOR	150PF 5% 50V	
	C 332	NCS21HJ-151AY	C CAPACITOR	150PF 5% 50V	
	C 335	NCB21HK-103AY	C CAPACITOR	.010MF 10% 50V	
	C 336	NCB21HK-103AY	C CAPACITOR	.010MF 10% 50V	
	C 337	NCB21HK-103AY	C CAPACITOR	.010MF 10% 50V	
	C 338	NCB21HK-103AY	C CAPACITOR	.010MF 10% 50V	
	C 339	QEK41CM-476	E CAPACITOR	47MF 20% 16V	
	C 340	NCB21HK-103AY	C CAPACITOR	.010MF 10% 50V	
	C 341	QEKF1AM-107ZN	E CAPACITOR	100MF 20% 10V	
	C 342	QEK41EM-475	E CAPACITOR	4.7MF 20% 25V	
	C 343	QET41CM-106	E CAPACITOR	10MF 20% 16V	
	C 344	NCB21HK-472AY	C CAPACITOR	4700PF 10% 50V	
	C 345	NCS21HJ-331AY	C CAPACITOR	330PF 5% 50V	
	CN301	VMC0163-R06	CONNECTOR		
	CN302	VMC0163-R06	CONNECTOR		
	CN303	QGB2011M1-10	PWB CONECTOR		
	CN304	QGB2011M1-10	PWB CONECTOR		
	CN305	VMC0163-R10	CONNECTOR		
	CN306	VMC0163-R11	CONNECTOR		
	D 301	MA704A	S.K.DIODE		
	D 302	HSM2838C	DIODE		
	D 307	HZM5.1NB2-X	CHIP Z DIODE CM		
	D 308	HZM5.1NB2-X	CHIP Z DIODE CM		
	D 309	MA704A	S.K.DIODE		
	IC301	BA3126N	IC		
	IC302	AN7345K	IC		
	IC303	BU4094BCF-X	IC		
	IC304	BU4094BCF-X	IC		
	L 301	QQR0620-001	OSC COIL(BIAS)		
	L 303	VQP0033-100Z	INDUCTOR		
	Q 101	DTC114TKT146	TRANSISTOR		
	Q 102	DTC144TKA-X	TRANSISTOR		
	Q 103	DTC144EKA-X	TRANSISTOR		
	Q 104	DTC114TKT146	TRANSISTOR		
	Q 105	2SC2001(L,K)	TRANSISTOR		
	Q 201	DTC114TKT146	TRANSISTOR		
	Q 202	DTC144TKA-X	TRANSISTOR		
	Q 203	DTC144EKA-X	TRANSISTOR		
	Q 204	DTC114TKT146	TRANSISTOR		
	Q 205	2SC2001(L,K)	TRANSISTOR		
	Q 301	DTC144TKA-X	TRANSISTOR		
	Q 302	2SC2001(L,K)	TR I/M		
	Q 303	2SC2001(L,K)	TR I/M		
	Q 304	2SC2001(L,K)	TRANSISTOR		
	Q 305	2SC2001(L,K)	TRANSISTOR		
	Q 306	2SC1623(6)	TRANSISTOR		
	Q 307	2SC1623(6)	TRANSISTOR		
	Q 308	2SC1623(6)	TRANSISTOR		
	Q 309	2SC1623(6)	TRANSISTOR		

BLOCK NO. 07

⚠	REF.	PARTS NO.	PARTS NAME	REMARKS	SUFFIX
	Q 312	2SB562(C)	TRANSISTOR		
	Q 313	2SC1623(6)	TRANSISTOR		
	Q 314	2SB562(C)	TRANSISTOR		
	Q 315	2SC1623(6)	TRANSISTOR		
	Q 316	2SA952(L,K)	TRANSISTOR		
	Q 317	DTC124EK	TRANSISTOR		
	Q 318	DTA144EKA-X	TRANSISTOR		
	Q 319	DTC144EKA-X	TRANSISTOR		
	Q 320	DTC144EKA-X	TRANSISTOR		
	Q 321	DTC144EKA-X	TRANSISTOR		
	Q 322	DTC144EKA-X	TRANSISTOR		
	Q 323	2SC1623(6)	TRANSISTOR		
	R 102	NRSA02J-102NY	MG RESISTOR	1.0K 5% 1/10W	
	R 103	NRSA02J-183NY	MG RESISTOR	18K 5% 1/10W	
	R 105	NRSA02J-220NY	MG RESISTOR	22 5% 1/10W	
	R 106	NRSA02J-392NY	MG RESISTOR	3.9K 5% 1/10W	
	R 107	NRSA02J-123NY	MG RESISTOR	12K 5% 1/10W	
	R 108	NRSA02J-222NY	MG RESISTOR	2.2K 5% 1/10W	
	R 109	NRSA02J-152NY	MG RESISTOR	1.5K 5% 1/10W	
	R 110	NRSA02J-152NY	MG RESISTOR	1.5K 5% 1/10W	
	R 111	NRSA02J-562NY	MG RESISTOR	5.6K 5% 1/10W	
	R 112	NRSA02J-122NY	MG RESISTOR	1.2K 5% 1/10W	
	R 113	NRSA02J-271NY	MG RESISTOR	270 5% 1/10W	
	R 114	NRSA02J-391NY	MG RESISTOR	390 5% 1/10W	
	R 115	NRSA02J-332NY	MG RESISTOR	3.3K 5% 1/10W	
	R 116	NRSA02J-182NY	MG RESISTOR	1.8K 5% 1/10W	
	R 117	NRSA02J-332NY	MG RESISTOR	3.3K 5% 1/10W	
	R 118	NRSA02J-152NY	MG RESISTOR	1.5K 5% 1/10W	
	R 119	NRSA02J-203NY	MG RESISTOR	20K 5% 1/10W	
	R 120	NRSA02J-102NY	MG RESISTOR	1.0K 5% 1/10W	
	R 121	NRSA02J-122NY	MG RESISTOR	1.2K 5% 1/10W	
	R 202	NRSA02J-102NY	MG RESISTOR	1.0K 5% 1/10W	
	R 203	NRSA02J-183NY	MG RESISTOR	18K 5% 1/10W	
	R 205	NRSA02J-220NY	MG RESISTOR	22 5% 1/10W	
	R 206	NRSA02J-392NY	MG RESISTOR	3.9K 5% 1/10W	
	R 207	NRSA02J-123NY	MG RESISTOR	12K 5% 1/10W	
	R 208	NRSA02J-222NY	MG RESISTOR	2.2K 5% 1/10W	
	R 209	NRSA02J-152NY	MG RESISTOR	1.5K 5% 1/10W	
	R 210	NRSA02J-152NY	MG RESISTOR	1.5K 5% 1/10W	
	R 211	NRSA02J-562NY	MG RESISTOR	5.6K 5% 1/10W	
	R 212	NRSA02J-122NY	MG RESISTOR	1.2K 5% 1/10W	
	R 213	NRSA02J-271NY	MG RESISTOR	270 5% 1/10W	
	R 214	NRSA02J-391NY	MG RESISTOR	390 5% 1/10W	
	R 215	NRSA02J-332NY	MG RESISTOR	3.3K 5% 1/10W	
	R 216	NRSA02J-182NY	MG RESISTOR	1.8K 5% 1/10W	
	R 217	NRSA02J-332NY	MG RESISTOR	3.3K 5% 1/10W	
	R 218	NRSA02J-152NY	MG RESISTOR	1.5K 5% 1/10W	
	R 219	NRSA02J-203NY	MG RESISTOR	20K 5% 1/10W	
	R 220	NRSA02J-102NY	MG RESISTOR	1.0K 5% 1/10W	
	R 221	NRSA02J-122NY	MG RESISTOR	1.2K 5% 1/10W	
	R 301	NRS181J-221NY	MG RESISTOR	220 5% 1/8W	
	R 302	NRS181J-101NY	MG RESISTOR	100 5% 1/8W	
	R 304	NRSA02J-393NY	MG RESISTOR	39K 5% 1/10W	
	R 305	NRSA02J-103NY	MG RESISTOR	10K 5% 1/10W	
	R 306	NRSA02J-103NY	MG RESISTOR	10K 5% 1/10W	

BLOCK NO. 07

⚠	REF.	PARTS NO.	PARTS NAME	REMARKS	SUFFIX
	R 307	NRSA02J-103NY	MG RESISTOR	10K 5% 1/10W	
	R 308	NRSA02J-152NY	MG RESISTOR	1.5K 5% 1/10W	
	R 309	NRSA02J-152NY	MG RESISTOR	1.5K 5% 1/10W	
	R 310	NRS181J-820NY	MG RESISTOR	82 5% 1/8W	
	R 311	NRS181J-820NY	MG RESISTOR	82 5% 1/8W	
	R 313	NRSA02J-3R3NYM	RES. C.M	3.3 5% 1/10W	
	R 314	NRSA02J-223NY	RES. C.M	22K 5% 1/10W	
	R 315	NRSA02J-100NY	MG RESISTOR	10 5% 1/10W	
	R 316	NRSA02J-223NY	RES. C.M	22K 5% 1/10W	
	R 317	NRSA02J-100NY	MG RESISTOR	10 5% 1/10W	
	R 318	NRSA02J-123NY	RES. C.M	12K 5% 1/10W	
	R 319	NRSA02J-152NY	MG RESISTOR	1.5K 5% 1/10W	
	R 321	NRSA02J-123NY	RES. C.M	12K 5% 1/10W	
	R 322	NRSA02J-152NY	MG RESISTOR	1.5K 5% 1/10W	
	R 327	NRSA02J-474NY	MG RESISTOR	470K 5% 1/10W	
	R 328	NRSA02J-222NY	MG RESISTOR	2.2K 5% 1/10W	
	R 329	NRSA02J-222NY	MG RESISTOR	2.2K 5% 1/10W	
	R 330	NRSA02J-0R0NY	RES. C.M	5% 1/10W	
	R 335	NRSA02J-222NY	MG RESISTOR	2.2K 5% 1/10W	
	R 336	NRSA02J-392NY	MG RESISTOR	3.9K 5% 1/10W	
	R 338	NRSA02J-222NY	MG RESISTOR	2.2K 5% 1/10W	
	R 339	NRSA02J-222NY	MG RESISTOR	2.2K 5% 1/10W	
	R 341	NRSA02J-222NY	MG RESISTOR	2.2K 5% 1/10W	
	R 343	NRSA02J-0R0NY	RES. C.M	5% 1/10W	
	R 345	NRSA02J-222NY	MG RESISTOR	2.2K 5% 1/10W	
	R 346	NRSA02J-0R0NY	RES. C.M	5% 1/10W	
	R 347	NRSA02J-392NY	MG RESISTOR	3.9K 5% 1/10W	
	R 348	NRSA02J-222NY	MG RESISTOR	2.2K 5% 1/10W	
	R 350	NRSA02J-472NY	RES. C.M	4.7K 5% 1/10W	
	R 351	NRSA02J-151NY	MG RESISTOR	150 5% 1/10W	
	R 353	NRSA02J-472NY	RES. C.M	4.7K 5% 1/10W	
	R 354	NRSA02J-151NY	MG RESISTOR	150 5% 1/10W	
	R 355	NRSA02J-332NY	MG RESISTOR	3.3K 5% 1/10W	
	R 356	NRSA02J-103NY	RES. C.M	10K 5% 1/10W	
	R 357	NRSA02J-103NY	RES. C.M	10K 5% 1/10W	
	R 358	NRSA02J-123NY	RES. C.M	12K 5% 1/10W	
	R 359	NRSA02J-123NY	RES. C.M	12K 5% 1/10W	
	R 360	NRSA02J-433NYT	RES. C.M **	43K 5% 1/10W	
	R 361	NRSA02J-183NY	MG RESISTOR	18K 5% 1/10W	
	R 362	NRSA02J-123NY	RES. C.M	12K 5% 1/10W	
	R 363	NRSA02J-183NY	MG RESISTOR	18K 5% 1/10W	
	R 364	NRSA02J-433NYT	RES. C.M **	43K 5% 1/10W	
	R 365	NRSA02J-203NY	MG RESISTOR	20K 5% 1/10W	
	R 366	NRSA02J-123NY	RES. C.M	12K 5% 1/10W	
	R 367	NRSA02J-102NY	RES. C.M	1.0K 5% 1/10W	
	R 368	NRSA02J-391NY	MG RESISTOR	390 5% 1/10W	
	R 369	NRSA02J-391NY	MG RESISTOR	390 5% 1/10W	
	R 371	NRS181J-222NY	MG RESISTOR	2.2K 5% 1/8W	
	R 374	NRSA02J-912NY	RES. C.M	9.1K 5% 1/10W	
	R 375	NRSA02J-683NY	MG RESISTOR	68K 5% 1/10W	
	R 376	NRS181J-6R8NY	MG RESISTOR	6.8 5% 1/8W	
	VR101	QVPA603-503A	SEMI V RESISTOR		
	VR201	QVPA603-503A	SEMI V RESISTOR		
	VR301	QVPA603-103M	SEMI V RESISTOR		
	WIRE	VWS304-10A13K	FLAT WIRE		

■ Reel Pulse

BLOCK NO. 08

⚠	REF.	PARTS NO.	PARTS NAME	REMARKS	SUFFIX
	CN 1	EMV7159-010	10P PLUG ASSY		
	D 1	1SR139-100	SI DIODE		
	IC 1	SG-105F3-BB/C	PHOTO SENSER		
	P 1	VMZ0015-002	POST PIN		
	SW 2	MXS00220MVL0	CASSETTE SWITCH	TAPE	
	SW 4	MXS00220MVL0	CASSETTE SWITCH	70U	
	SW 6	QSW0507-001	SWITCH		

■ Reel Pulse

BLOCK NO. 09

⚠	REF.	PARTS NO.	PARTS NAME	REMARKS	SUFFIX
	CN 1	EMV7159-010	10P PLUG ASSY		
	D 1	1SR139-100	SI DIODE		
	IC 1	SG-105F3-BB,C	PHOTO SENSER		
	P 1	VMZ0015-002	POST PIN		
	SW 1	MXS00220MVL0	CASSETTE SWITCH	R.REC	
	SW 2	MXS00220MVL0	CASSETTE SWITCH	TAPE	
	SW 4	MXS00220MVL0	CASSETTE SWITCH	70U	
	SW 5	MXS00220MVL0	CASSETTE SWITCH	F.REC	
	SW 6	QSW0507-001	SWITCH		

Packing and Accessorie List

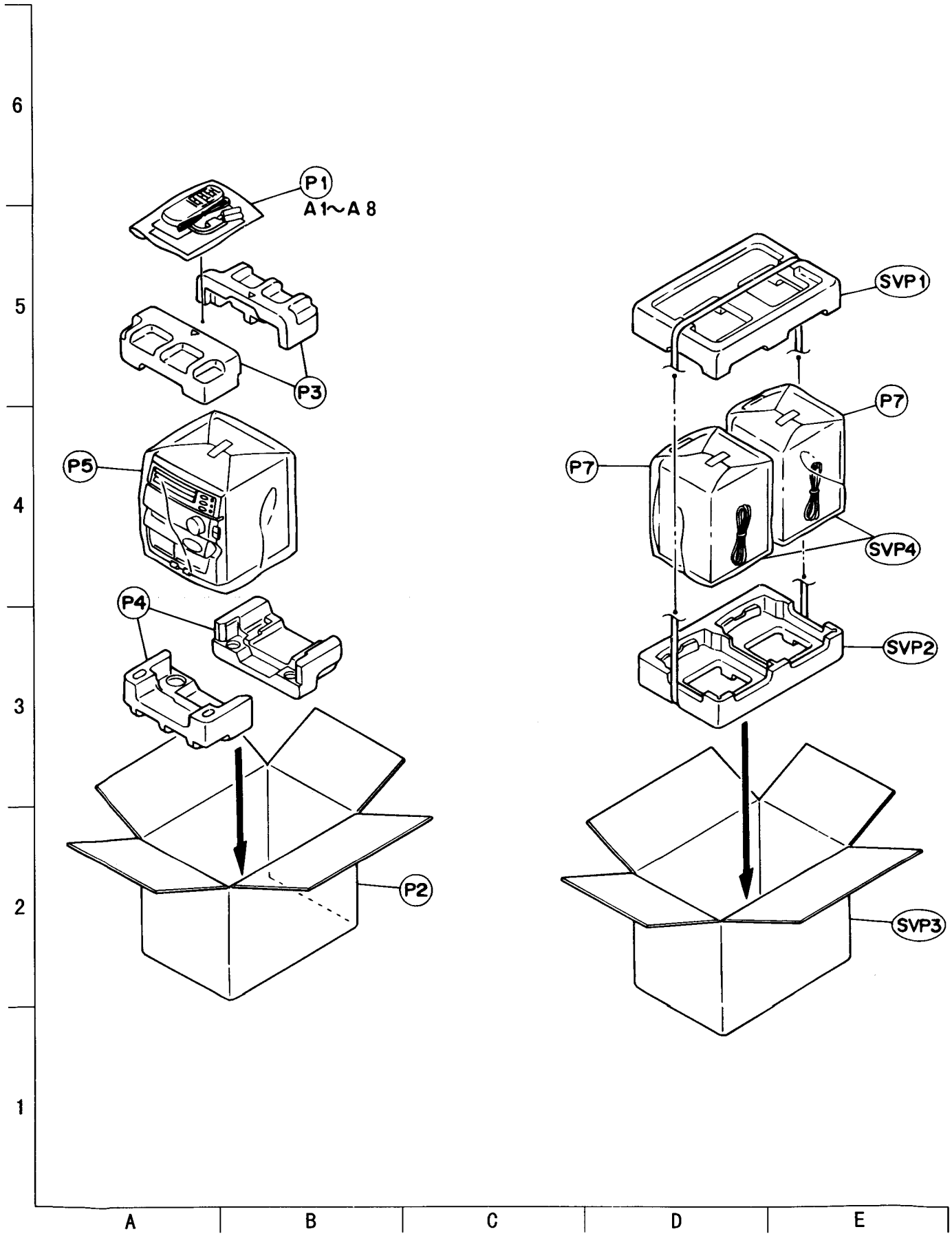

■ Packing Parts List

BLOCK NO. M5MM

⚠	REF.	PARTS NO.	PARTS NAME	REMARKS	QTY	SUFFIX	CLR
	P 1	E309758-002	POLY BAG		1		
	P 2	GV20010-005A	CARTON		1		
	P 3	GV10007-001A	CUSHION UPPER		1		
	P 4	GV10008-001A	CUSHION BOTTOM		1		
	P 5	E309758-017	POLY BAG		1		
	P 7	138736001051	POLY BAG	FOR SPEAKER	2		
	SVP 1	139764941023	SPK CUSHION	UPPER	1		
	SVP 2	139764941024	SPK CUSHION	BOTTOM	1		
	SVP 3	140774881023	SPK CARTON		1		

■ Accessories Parts List

BLOCK NO. M6MM

⚠	REF.	PARTS NO.	PARTS NAME	REMARKS	QTY	SUFFIX	CLR
	A 1	QAL0014-001	AM LOOP ANT		1		
	A 2	GVT0002-005A	INSTRUCTIONS		1	E	
		GVT0002-006A	INSTRUCTIONS		1	EN	
		GVT0002-007A	INSTRUCTIONS		1	B	
	A 4	EWP503-001	ANT.WIRE		1		
	A 5	RM-SED40TRU	REMOCON		1		
	A 6	R6SPTT/2STS	BATTERY		1		
	A 7	BT-54008-1	WARRANTY CARD		1		
	A 8	E43486-340A	SAFETY INST		1	B	
	SVP 4	SPD302H-SPBOX	SPEAKER ASS'Y		2		

MX-D302T
CA-D302T
SP-D302/SP-D432

JVC

SERVICE MANUAL

COMPACT COMPONENT SYSTEM

MX-D302T

UNIT No. CA-D302T
SP-D302(EXCEPT Ver.U,A type)
SP-D432(ONLY Ver.U,A type)

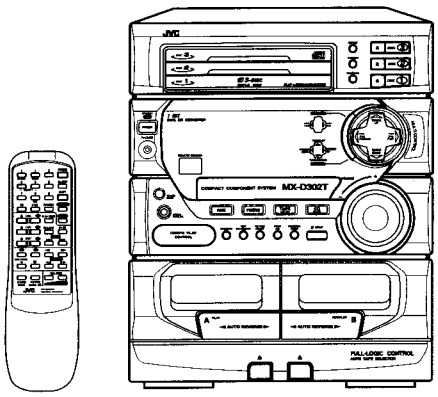

Area Suffix

A	Australia
B	U.K.
E	Continental Europe
EE	East Europe
EN	North Europe
U	Other Areas
US	Singapore
UT	Taiwan
UX	Saudi Arabia
J	U.S.A.
C	Canada

COMPACT disc DIGITAL AUDIO

Contents

Safety Precautions ---------- 1-2
Instruction Book ---------- 1-5~20
Description of Major ICs ---------- 2-1
Internal Connection of FL Display --- 2-14
Removal of Main Parts ---------- 2-15
Flow of Functional Operation Until TOC Read ---------- 2-29
Maintenance of Laser Pickup ---------- 2-30
Replacement of Laser Pickup ---------- 2-30
Main Adjustment ---------- 2-31
Self Diagnosis Function of CD ---------- 2-35
Block Diagrams ---------- 2-37
Schematic Diagrams ---------- 2-38
Printed Circuit Boards ---------- 2-49~55
Parts List ---------- 3-1 ~29

COPYRIGHT © 1998 VICTOR COMPANY OF JAPAN, LTD.

No.20669
Mar. 1998

Safety Precautions

1. This design of this product contains special hardware and many circuits and components specially for safety purposes. For continued protection, no changes should be made to the original design unless authorized in writing by the manufacturer. Replacement parts must be identical to those used in the original circuits. Services should be performed by qualified personnel only.
2. Alterations of the design or circuitry of the product should not be made. Any design alterations of the product should not be made. Any design alterations or additions will void the manufacturer's warranty and will further relieve the manufacture of responsibility for personal injury or property damage resulting therefrom.
3. Many electrical and mechanical parts in the products have special safety-related characteristics. These characteristics are often not evident from visual inspection nor can the protection afforded by them necessarily be obtained by using replacement components rated for higher voltage, wattage, etc. Replacement parts which have these special safety characteristics are identified in the Parts List of Service Manual. Electrical components having such features are identified by shading on the schematics and by (⚠) on the Parts List in the Service Manual. The use of a substitute replacement which does not have the same safety characteristics as the recommended replacement parts shown in the Parts List of Service Manual may create shock, fire, or other hazards.
4. The leads in the products are routed and dressed with ties, clamps, tubings, barriers and the like to be separated from live parts, high temperature parts, moving parts and/or sharp edges for the prevention of electric shock and fire hazard. When service is required, the original lead routing and dress should be observed, and it should be confirmed that they have been returned to normal, after re-assembling.
5. Leakage currnet check (Electrical shock hazard testing)
   After re-assembling the product, always perform an isolation check on the exposed metal parts of the product (antenna terminals, knobs, metal cabinet, screw heads, headphone jack, control shafts, etc.) to be sure the product is safe to operate without danger of electrical shock.
   Do not use a line isolation transformer during this check.
   - Plug the AC line cord directly into the AC outlet. Using a "Leakage Current Tester", measure the leakage current from each exposed metal parts of the cabinet , particularly any exposed metal part having a return path to the chassis, to a known good earth ground. Any leakage current must not exceed 0.5mA AC (r.m.s.)
   - Alternate check method
     Plug the AC line cord directly into the AC outlet. Use an AC voltmeter having, 1,000 ohms per volt or more sensitivity in the following manner. Connect a 1,500Ω 10W resistor paralleled by a 0.15μF AC-type capacitor between an exposed metal part and a known good earth ground.
     Measure the AC voltage across the resistor with the AC voltmeter.
     Move the resistor connection to eachexposed metal part, particularly any exposed metal part having a return path to the chassis, and meausre the AC voltage across the resistor. Now, reverse the plug in the AC outlet and repeat each measurement. voltage measured Any must not exceed 0.75 V AC (r.m.s.). This corresponds to 0.5 mA AC (r.m.s.).

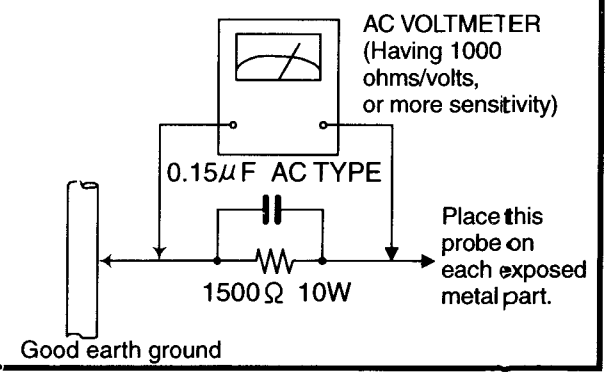

Warning

1. This equipment has been designed and manufactured to meet international safety standards.
2. It is the legal responsibility of the repairer to ensure that these safety standards are maintained.
3. Repairs must be made in accordance with the relevant safety standards.
4. It is essential that safety critical components are replaced by approved parts.
5. If mains voltage selector is provided, check setting for local voltage.

⚠ ***CAUTION*** **Burrs formed during molding may be left over on some parts of the chassis. Therefore, pay attention to such burrs in the case of preforming repair of this system.**

Safety Precautions (U.K only)

1. This design of this product contains special hardware and many circuits and components specially for safety purposes. For continued protection, no changes should be made to the original design unless authorized in writing by the manufacturer. Replacement parts must be identical to those used in the original circuits.
2. Any unauthorised design alterations or additions will void the manufacturer's guarantee ; furthermore the manufacturer cannot accept responsibility for personal injury or property damage resulting therefrom.
3. Essential safety critical components are identified by (⚠) on the Parts List and by shading on the schematics, and must never be replaced by parts other than those listed in the manual. please note however that many electrical and mechanical parts in the product have special safety related characteristics. These characteristics are often not evident from visual inspection. Parts other than specified by the manufacturer may not have the same safety characteristics as the recommended replacement parts shown in the Parts List of the Service Manual and may create shock, fire, or other hazards.
4. The leads in the products are routed and dressed with ties, clamps, tubings, barriers and the like to be separated from live parts, high temperature parts, moving parts and/or sharp edges for the prevention of electric shock and fire hazard. When service is required, the original lead routing and dress should be observed, and it should be confirmed that they have been returned to normal, after re-assembling.

Warning

1. Service should be performed by qualified personnel only.
2. This equipment has been designed and manufactured to meet international safety standards.
3. It is the legal responsibility of the repairer to ensure that these safety standards are maintained.
4. Repairs must be made in accordance with the relevant safety standards.
5. It is essential that safety critical components are replaced by approved parts.
6. If mains voltage selector is provided, check setting for local voltage.

⚠ ***CAUTION*** **Burrs formed during molding may be left over on some parts of the chassis. Therefore, pay attention to such burrs in the case of preforming repair of this system.**

Important for Laser Products

1.**CLASS 1 LASER PRODUCT**

2.**DANGER :** Invisible laser radiation when open and inter lock failed or defeated. Avoid direct exposure to beam.

3.**CAUTION :** There are no serviceable parts inside the Laser Unit. Do not disassemble the Laser Unit. Replace the complete Laser Unit if it malfunctions.

4.**CAUTION :** The compact disc player uses invisible laserradiation and is equipped with safety switches whichprevent emission of radiation when the drawer is open and the safety interlocks have failed or are de feated. It is dangerous to defeat the safety switches.

5.**CAUTION :** If safety switches malfunction, the laser is able to function.

6.**CAUTION :** Use of controls, adjustments or performance of procedures other than those specified herein may result in hazardous radiation exposure.

VARNING : Osynlig laserstrålning är denna del är öppnad och spårren är urkopplad. Betrakta ej strålen.

VARO : Avattaessa ja suojalukitus ohitettaessa olet alttiina näkymättömälle lasersäteilylle.Älä katso säteeseen.

ADVARSEL : Usynlig laserstråling ved åbning , når sikkerhedsafbrydere er ude af funktion. Undgå udsættelse for stråling.

ADVARSEL : Usynlig laserstråling ved åpning,når sikkerhetsbryteren er avslott. unngå utsettelse for stråling.

REPRODUCTION AND POSITION OF LABELS

WARNING LABEL

(Except for the U.S.A.and Canada)

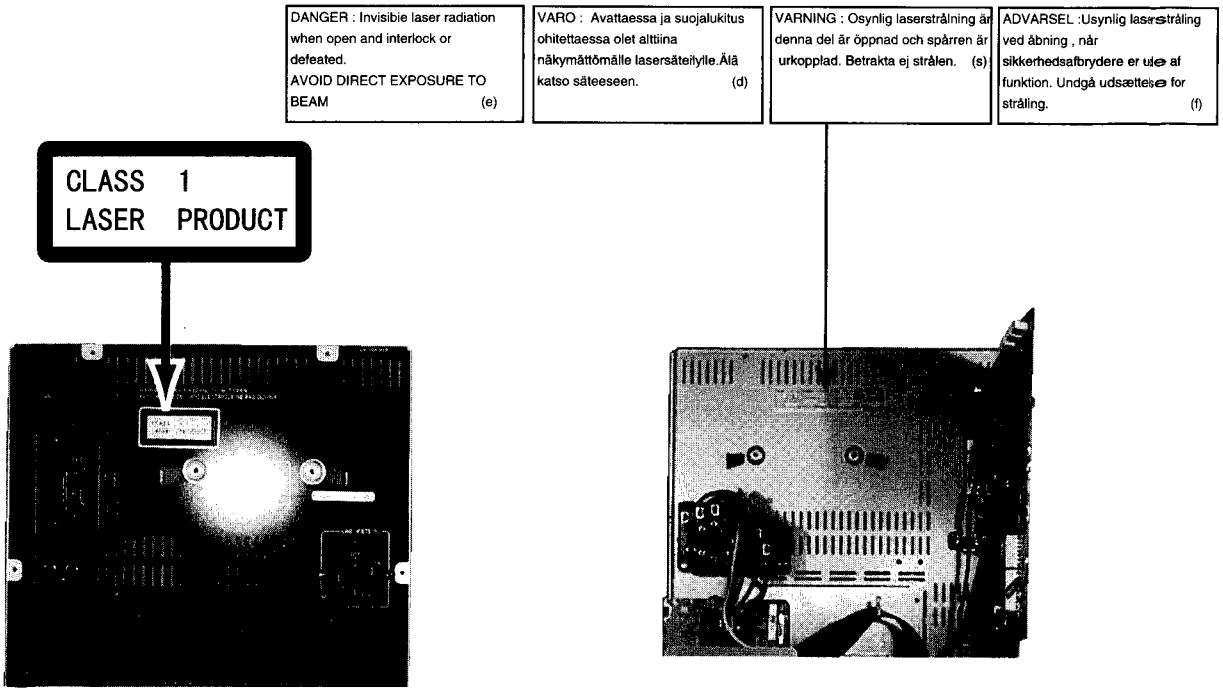

Specifications

Amplifier Section

Output Power **55 watts per channel, min. RMS at 6 ohms at 1 kHz, with no more than 3% total harmonic distortion.**

Input Sensitivity/Impedance (1 kHz)
AUX 300 mV/50 kohms
Speaker terminals 6 - 16 ohms

Cassette Deck Section

Frequency Response
Type II (CrO_2) : 50 - 14,000 Hz
Type I (NORMAL) : 50 - 14,000 Hz
Wow And Flutter 0.15% (WRMS)

CD Automatic Changer Section

CD Capacity 3 discs
Dynamic Range 85 dB
Signal-To-Noise Ratio 90 dB
Wow And Flutter Unmeasurable

Tuner Section

FM Tuner
Tuning Range 87.5 - 108.0 MHz
AM Tuner
Tuning Range 530 - 1,710 kHz

Dimensions 265 × 315 × 340 mm (W/H/D)
(10-7/16 × 12-7/16 × 13-7/16 inches)
Mass 7.2 kg (15.9 lbs)

Speaker Specifications
SP-D302

Type 2-way, 2-speaker bass-reflex type
Speaker
Tweeter 5 cm (2 inches) cone × 1
Woofer 12 cm (4-3/4 inches) cone × 1
Power Handling Capacity 60 W
Impedance 6 ohms
Frequency Range 50 Hz - 20,000 Hz
Sound Pressure Level 90 dB/w • m

Dimensions 215 × 315 × 230 mm (W/H/D)
(8-1/2 × 12-7/16 × 9-1/16 inches)
Mass 3.3 kg (7.3 lbs)

Accessories

AM Loop Antenna (1)
Remote Control (1)
Batteries R6P (SUM-3)/AA (15F) (2)
FM Wire Antenna (1)

Power Specifications

Power Requirements AC 120 V∿, 60 Hz
Power Consumption 95 watts
9 watts (in standby mode)

Design and specifications are subject to change without notice.

EN

0198TNMNATJEM

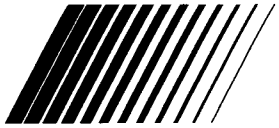

COMPACT COMPONENT SYSTEM

MX-D302T

Consists of CA-D302T and SP-D302.

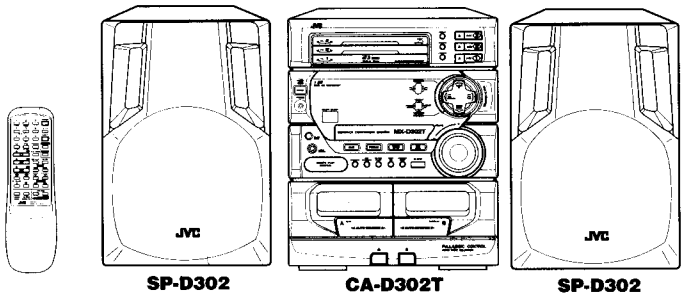

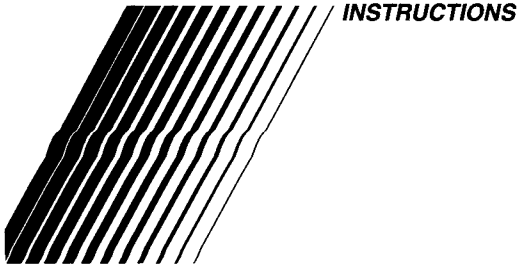

For Customer Use:
Enter below the Model No. and Serial No. which are located either on the rear, bottom or side of the cabinet. Retain this information for future reference.

Model No. _____

Serial No. _____

GVT0002-001A
[J]

CA-D302T

Warnings, Cautions and Others

The lightning flash with arrowhead symbol, within an equilateral triangle is intended to alert the user to the presence of uninsulated "dangerous voltage" within the product's enclosure that may be of sufficient magnitude to constitute a risk of electric shock to persons.

The exclamation point within an equilateral triangle is intended to alert the user to the presence of important operating and maintenance (servicing) instructions in the literature accompanying the appliance.

WARNING: TO REDUCE THE RISK OF FIRE OR ELECTRIC SHOCK, DO NOT EXPOSE THIS APPLIANCE TO RAIN OR MOISTURE.

For Canada/pour le Canada

CAUTION: TO PREVENT ELECTRIC SHOCK, MATCH WIDE BLADE OF PLUG TO WIDE SLOT, FULLY INSERT
ATTENTION: POUR EVITER LES CHOCS ELECTRIQUES, INTRODUIRE LA LAME LA PLUS LARGE DE LA FICHE DANS LA BORNE CORRESPONDANTE DE LA PRISE ET POUSSER JUSQUAU FOND

Caution — POWER switch!
Disconnect the mains plug to shut the power off completely. The POWER switch in any position does not disconnect the mains line. The power can be remote controlled.

IMPORTANT FOR LASER PRODUCTS

1. CLASS 1 LASER PRODUCT
2. **DANGER:** Invisible laser radiation when open and interlock failed or defeated. Avoid direct exposure to beam.
3. **CAUTION:** Do not open the top cover. There are no user serviceable parts inside the unit; leave all servicing to qualified service personnel.

CAUTION

To reduce the risk of electrical shocks, fire, etc.:
1. Do not remove screws, covers or cabinet.
2. Do not expose this appliance to rain or moisture.

Thank you for purchasing the JVC Compact Component System.
We hope it will be a valued addition to your home, giving you years of enjoyment.
Be sure to read this instruction manual carefully before operating your new stereo system.
Here you will find all the information you need to set up and use the system.
For questions that are not be answered in the manual, please contact your dealer.

Features

Easy operation

Great sound

Triple Tray

Here are some of the things that make your System powerful and easy to use.
- The controls and operations have been redesigned to make them very easy to use, so you can spend your time listening to music.
  - With the One Touch Operation feature of JVC's **COMPU PLAY** you can turn on the System and start the radio, the Cassette Deck, or the CD Player with a single touch.
- To get such great sound from such a compact package the System has:
  - Programmed sound mode includes live surround effects **D. CLUB, HALL,** and **STADIUM**. It also includes S.E.A (Sound Effect Amplifier) effects **ROCK, CLASSIC,** and **POP**.
- CD changer function can operate 3 discs.
  - Discs can be changed during play using the **TRIPLE TRAY**.
  - Continuous, random or program play of 3 discs.
- Includes a timer for recording broadcasts while you are out, and an easy-to-use Sleep timer.

How This Manual Is Organized

In this manual we have incorporated some special features:
- Basic information that is the same for many different functions is grouped in one place, and not repeated in each procedure. For instance, in the section on playing a CD, we do not repeat the information about setting the volume and the sound conditions, which are discussed in the Common Operations section.
- Name of buttons and controls are written in all capital letters like this: SOUND MODE.

The manual has a table of contents to help you quickly look up what you want to know.
We've enjoyed making this manual for you, and hope you will use it to enjoy the sound and many features built into your System.

IMPORTANT CAUTIONS

1. Installation of the Unit
- Select a place which is level, dry and neither too hot nor too cold. (Between 5°C and 35°C or 41°F and 95°F.)
- Leave sufficient distance between the Unit and a TV.
- Do not use the Unit in a place subject to vibrations.

2. Power cord
- Do not handle the power cord with wet hands!
- Some power (9 watts) is always consumed as long as the power cord is connected to the wall outlet.
- When unplugging the Unit from the wall outlet, always pull the plug, not the power cord.

3. Malfunctions, etc.
- There are no user-serviceable parts inside. If anything goes wrong, unplug the power cord and consult your dealer.
- Do not insert any metallic object into the Unit.

Table of Contents

Features 1
How This Manual Is Organized 1
IMPORTANT CAUTIONS 1

Getting Started 3
Accessories 3
How to Put Batteries in the Remote Control 3
Using the Remote Control 3
Connecting the FM Antenna 4
Using the Supplied Wire Antenna 4
Using an FM 75-Ohm Antenna Cable (not supplied) ... 4
Connecting the AM Antenna 4
Connecting the Speakers 5
Connecting Auxiliary Equipment 5
COMPU PLAY 6

Common Operations 7
Turning the Power On and Off 7
Turning the System On 7
Turning the System Off 7
Adjusting the Volume 8
Reinforcing the Bass Sound 8
Sound Modes 8
Listening to Auxiliary Equipment 9

Using the Tuner 10
One Touch Radio 10
Tuning In a Station 10
Switching between Frequency Bands 10
Three Ways to Select a Station 11
Presetting Stations 11
Changing the FM Reception Mode 11

Using the CD Player 12
The Quickest Way to Start a CD Is with the One Touch Operation 13
Loading Discs 13
Basics of Using the CD Player — Normal Play 14
Playing a Disc 14
Selecting a Disc, Track Or Passage Within a Track 14
Locating a Track With the Remote Control Directly 14
Changing Discs While Playing 14
Continuous Play 15
Programming the Playing Order of the Tracks 15
Random Play 16
Repeating a Selection or the Discs 17
Tray Lock Function 17
Locking the Trays 17
Unlocking the Trays 17

Using the Cassette Deck (Listening to a Tape) 18
One Touch Play 18
Regular Play 18
Fast Left And Fast Right 19
Music Scan 19
Finding the Beginning of the Current Selection 19
Finding the Beginning of the Next Selection 19
Reverse Mode 19

Using the Cassette Deck (Recording) 20
Things to Know before You Start Recording 20
Standard Recording 21
Recording AM Station to Tape 22
CD Direct Recording 22
Tape to Tape Recording (Dubbing) 22
How to Use the DUBBING Button 22

Using the Timer 23
Setting the Clock 23
Setting the Timer 24
Setting the Sleep Timer 25

Care And Maintenance 26

Troubleshooting 27

Specifications ..... Back Page

Getting Started

Accessories

Check that you have all of the following items, which are supplied with the System.

AM Loop Antenna (1)
Remote Control (1)
Batteries (2)
FM Wire Antenna (1)

If any of these items is missing, contact your dealer immediately.

How to Put Batteries in the Remote Control

Match the polarity (+ and –) on the batteries with the + and – markings in the battery compartment.

R6P (SUM-3)/AA (15F)

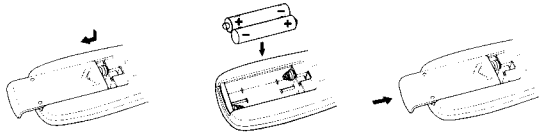

CAUTION: Handle batteries properly.
To avoid battery leakage or explosion:
- Remove batteries when the Remote Control will not be used for a long time.
- When you need to replace the batteries, replace both batteries at the same time with new ones.
- Do not use an old battery with a new one.
- Do not use different types of batteries together.

Using the Remote Control

The Remote Control makes it easy to use many of the functions of the System from a distance of up to 7m (23 feet) away.
You need to point the Remote Control at the remote sensor on the System's front panel.

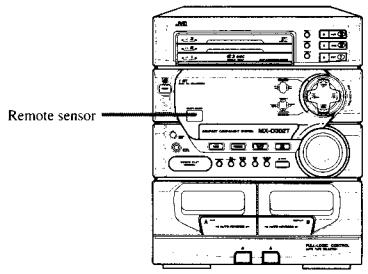

CAUTION: Make all connections before plugging the Unit into an AC power outlet.

Connecting the FM Antenna

Using the Supplied Wire Antenna

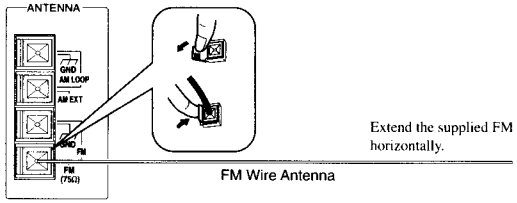

Using an FM 75-Ohm Antenna Cable (not supplied)

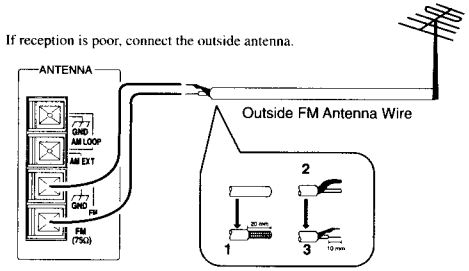

Before attaching a 75-ohm coaxial lead (the kind with a round wire going to an outside antenna), disconnect the supplied FM Wire Antenna.

CAUTION: To avoid noise, keep antennas away from metallic parts of the System, connecting cord and the AC power cord.

Connecting the AM Antenna

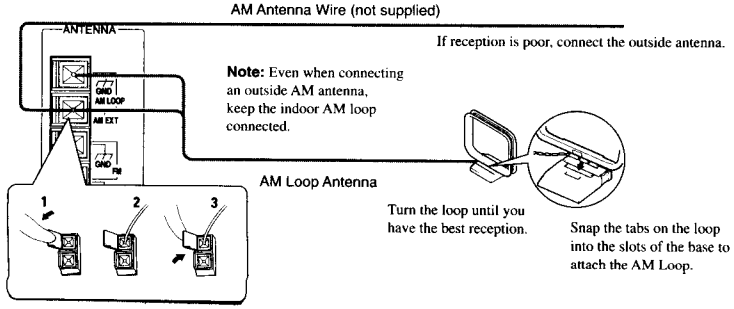

CAUTION: Make all connections before plugging the Unit into an AC power outlet.

Connecting the Speakers

For each speaker, connect one end of the speaker wire to the speaker terminals on the back of the System.

1. Open each of the terminals and insert the speaker wires firmly, then close the terminals.
2. Connect the red (+) and black (–) terminals of the right side speaker to the red (+) and black (–) terminals marked RIGHT on the System.
   Connect the red (+) and black (–) terminals of the left side speaker to the red (+) and black (–) terminals marked LEFT on the System.

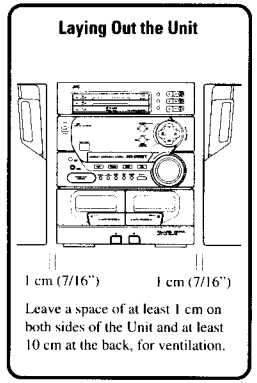

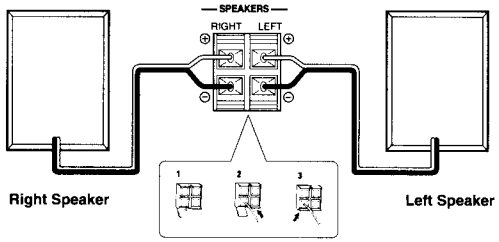

IMPORTANT: Use speakers with the correct impedance only. The correct impedance is indicated on the back panel.
CAUTION: If a TV is installed near speakers, the TV may display irregular colors. In this case, set the speakers away from the TV.

Connecting Auxiliary Equipment

VCR or other equipment
To listen to this source, press the AUX button.

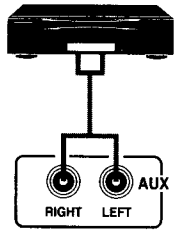

Now you can plug the AC power cord into the wall outlet, and your System is at your command!

COMPU PLAY

COMPU PLAY is JVC's feature that lets you control the most frequently used functions of the System with a single touch.
One Touch Operation starts playing a CD, turns on the radio, plays a tape, etc. with a single press of the play button for that function. What One Touch Operation does for you is to turn the power on, then start the function you have specified. If the Unit is not ready, such as no CD or tape in place, the Unit still powers on so you can insert a CD or tape.
How One Touch Operation works in each case is explained in the section dealing with that function.
The COMPU PLAY buttons are:

On the Unit

CD ►/II button
CD Player DISC 1 to DISC 3 buttons
CD Player Open/Close (⏏) buttons
FM/AM button
TAPE ◄► button
AUX button

On the Remote Control

FM/AM button
AUX button
CD control ►/II button
CD control DISC 1 to DISC 3 buttons
CD control Open/Close (⏏) buttons
Deck control ◄, ► buttons

Common Operations

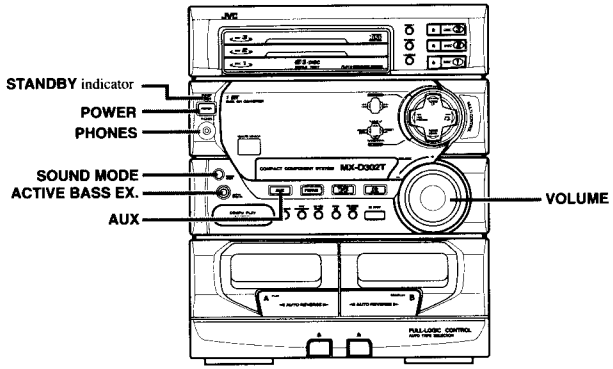

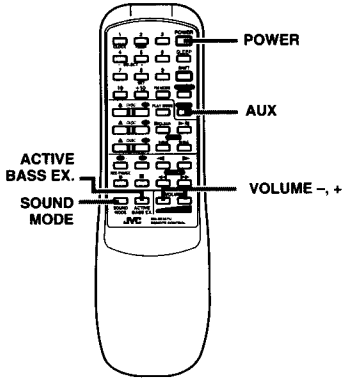

Display

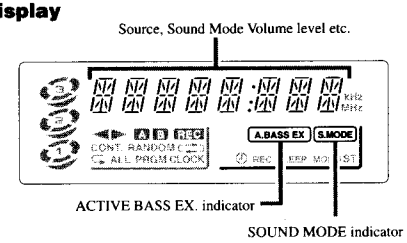

When the System is being used, the display shows other items as well. However, we have only shown the items described in this section.

Turning the Power On and Off

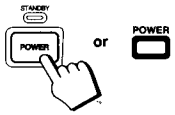

Turning the System On

Press the POWER button.

The display comes on and the STANDBY indicator goes out.
The System comes on ready to continue in the mode it was in when the power was last turned off.

- If the last thing you were doing was listening to a tape in Deck B, you are now ready to listen to a tape again in Deck B, or you can change to another source.
- If you were listening to the Tuner last, the Tuner comes on playing the station it was last set to.

Turning the System Off

Press the POWER button again.

The STANDBY indicator lights up and the display is blank, except for the clock display.

- Some power (9 watts) is always consumed even though power is turned off (called Standby Mode).
- To switch off the Unit completely, unplug the AC power cord from the AC outlet. When you unplug the AC power cord, the clock will be reset to AM12:00 immediately, and preset Tuner stations will be erased in a few days.

Adjusting the Volume

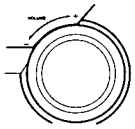

or

Turn the VOLUME control clockwise to increase the volume or anticlockwise to decrease it.
Turning the VOLUME control quickly also adjusts the volume level quickly.
When using the Remote Control, press the VOLUME + button to increase the volume or press the VOLUME – button to decrease it.
You can adjust the volume level between 0 and 50.

VOLUME 0

CAUTION: The Volume cannot be adjusted while the Unit is in STANDBY mode. DO NOT turn on the Unit and/or start playing any source without setting the VOLUME control to 0; otherwise, the sudden blast of sound can damage your hearing, speakers and/or headphones.

For private listening

Connect a pair of headphones to the PHONES jack. No sound comes out of the speakers.
Be sure to turn down the volume before connecting or putting on headphones.

Reinforcing the Bass Sound

or

The richness and fullness of the bass sound is maintained regardless of how low you set the volume.
You can use this effect only for playback.

To get the effect, press the ACTIVE BASS EX. (Active Bass Extension) button.
The frame around the A. BASS EX indicator lights up.

A.BASS EX

To cancel the effect, press the button again.
The frame around the A. BASS EX indicator goes off.

A.BASS EX

Sound Modes

The System has some preset sound effects that give you control of the way your music sounds, so you can tailor it for your room and for the quality of the source. We can give you some idea of how each one affects the music, but the only way to really tell is to try them yourself.

- The preset sound modes include modes using surround effects and modes using S.E.A. effects.
- Sound Mode effects cannot be recorded.

Surround effect modes

D. CLUB (Dance Club)	Increases resonance and bass.
HALL	Adds depth and brilliance to the sound, like in a concert hall.
STADIUM	Adds clarity and spreads the sound, like in an outdoor stadium.

S.E.A. effect modes

ROCK	Boosts low and high frequencies.
CLASSIC	Set for wide and dynamic sound stereo systems.
POP	Good for vocal music.

or

To get an effect, press the SOUND MODE button repeatedly until the Sound Mode you want appears on the display. The frame around the S.MODE indicator lights up.
Each time you press the SOUND MODE button, the display changes as follows:

S.MODE

→ **D. CLUB** → **HALL** → **STADIUM** → **ROCK** → **CLASSIC** → **POP** → **FLAT** → (back to the beginning)

To cancel an effect, press the SOUND MODE button until "FLAT" appears on the display. The frame around the S. MODE indicator goes out.

S.MODE

To recall the previous Sound Mode, press the SOUND MODE button again.

Listening to Auxiliary Equipment

or

By playing the sound from auxiliary equipment through the System, you can gain control over how the music or program sounds. Once the connected equipment is playing through the System, you can apply the sound effects.

- First make sure that the optional equipment is properly connected to the System. (See page 5).

1. **Set the VOLUME control to 0.**
2. **Press the AUX button.**
   When System is in Standby mode, the Unit is automatically turned on and "AUX" appears on the display. The AUX button on the Unit lights up.

   AUX

3. **Start playing the equipment.**
4. **Adjust the VOLUME control to the desired listening level.**
5. **Select a Sound Mode, if you wish.**

To Cancel the Setting

Change the source by starting any one of the System's built-in sound sources, such as the Tuner or CD Player.

Using the Tuner

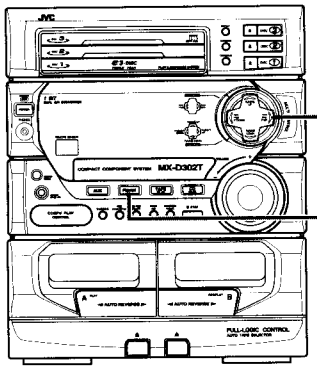

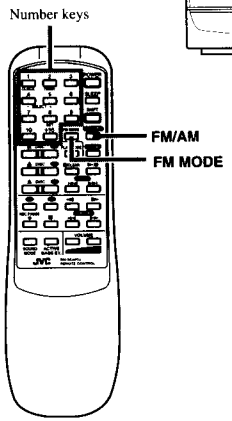

Display

Band display, Frequency display, Preset channel

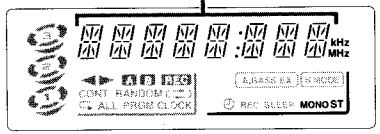

When the System is being used, the display shows other items as well. However, we have only shown the items described in this section.

You can listen to both FM and AM stations. Stations can be tuned in manually, automatically, or from preset memory storage.

■ Before listening to the radio:
- Check that both the FM and AM antennas are firmly connected. (See page 4).

COMPU PLAY

One Touch Radio

Just press the FM/AM button to turn on the Unit and start playing the most recent station tuned in.

■ You can switch from any other sound source to the radio by pressing the FM/AM button.

Tuning In a Station

Press the FM/AM button to turn on the radio.
The Frequency of the previously selected channel appears on the display.

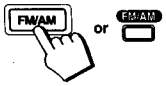

Switching between Frequency Bands

Press the FM/AM button.

Each time you press the button, the band alternates between FM and AM.

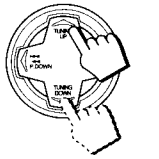

Three Ways to Select a Station

■ Press the TUNING DOWN or TUNING UP on the MULTI CONTROL repeatedly to move from frequency to frequency until you find the one you want. (Manual Tuning).

OR

■ Press and hold the TUNING DOWN or TUNING UP on the MULTI CONTROL for a few seconds, the frequency starts changing on the display. When a station is tuned in, the frequency stops changing. (Auto Tuning).

OR

■ Possible only after presetting stations.
Press once and release the P. DOWN or P. UP on the MULTI CONTROL to go to the next preset station.

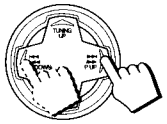

You can also use the Remote Control to tune in preset channels:

1. Press the FM/AM button so that you can receive the most recent station tuned in.
2. Select the station by entering the preset number in the number keys of the Remote Control.
   - Example: for channel 5, press 5. For channel 15, press +10 then 5. For channel 20, press +10, then 10. For channel 30, press +10 twice then 10.

P -- 5

- After you have selected the preset number and the number is displayed, the broadcast frequency of the selected channel is displayed.

Presetting Stations

You can preset up to 30 FM stations and up to 15 AM stations for the preset numbers.
Note: In some cases, test frequencies have been already memorized for the tuner since the factory examined the tuner preset function before shipment. This is not a malfunction. You can preset the stations you want into memory by following the presetting method.

1

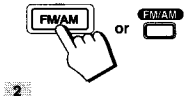

1. Select a band by pressing the FM/AM button.

2. Press the TUNING DOWN or TUNING UP on the MULTI CONTROL to tune into a station.

2

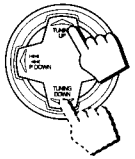

3. Press and hold the number keys on the Remote Control for a few seconds to set the preset number.

For preset numbers 1 to 10:
Press the number key for the preset number you want to set.
For preset numbers 11 to 20:
Press the 1 to 10 buttons after pressing the +10 button.
For preset numbers 21 to 30:
Press the 1 to 10 buttons after pressing the +10 button twice.

3

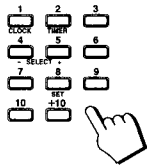

The preset number appears in the display after you have pressed the number keys. If you press and hold the button, the preset number display blinks. Release the button after the number starts to blink. This completes the preset setting.

4. Repeat steps 1 to 3 for each station you want to store in memory with a preset number.

CAUTION: If the Unit is unplugged or if a power failure occurs, the preset stations will be erased in a few days. If this happens, preset the station again.

Changing the FM Reception Mode

When an FM stereo broadcast is hard to receive or noisy, press the FM MODE button on the Remote Control so that the MONO indicator lights up in the display. Reception improves, but there is no stereo effect.

To restore the stereo effect, press the FM MODE button on the Remote Control so that the MONO indicator goes off. In this stereo mode, the ST indicator lights up and you can hear stereo effects, when a program is broadcast in stereo.

Using the CD Player

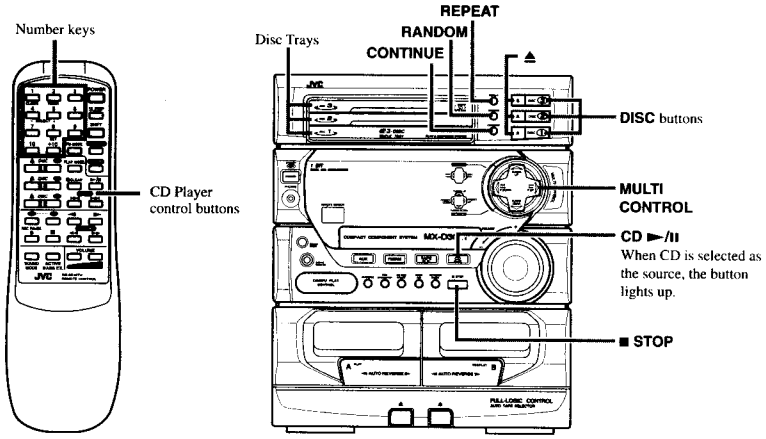

Display

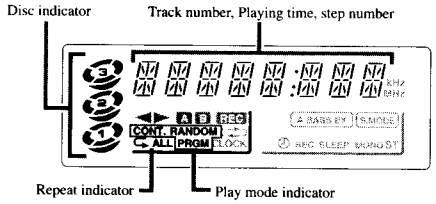

Disc indicators
A disc marker lights up for the disc number you have selected. The disc indicator blinks while a CD is being played.
The disc indcator goes off when CD Player has detected that there is no disc in the disc tray.

When the System is being used, the display shows other items as well. However, we have only shown the items described in this section.

The System's CD Player has an Automatic Changer with 3 disc trays. You can use Continuous, Random, Program or Repeat Play for the discs in DISC 1, DISC 2 and DISC 3. Repeat Play can repeat all the tracks on all the CD's or one track on one CD. There is also the Tray Lock function, which safely keeps discs in the trays.

Here are the basic things you need to know to play a CD and locate the different selections on it. Each selection is called a track, so when we are talking about locating a track, we are also talking about how you find a certain song or performance.

COMPU PLAY

The Quickest Way to Start a CD Is with the One Touch Operation

■ Press the CD ► /II button (or the ►/II button on the Remote Control).
For Normal Play (Play mode indicator is not lit):
- If there is a CD in the disc tray for the selected disc number, the power is automatically turned on and the CD is played from the first track.
- If there is no CD in the disc tray for the selected disc number, the power is automatically turned on and "NO DISC" appears on the display. The CD Player is in stop mode.

For Continuous Play or Random Play in Display mode (CONT. or RANDOM indicators are lit):
- If there is a CD in the disc tray for the selected disc number, the power is automatically turned on and the CD is played continuously from the first track or the tracks are played in random order.
- If there is no CD in the disc tray for the selected disc number, the power is automatically turned on and other tray containing a CD is selected and is played continuously from the first track or the tracks are played in random order.
- If there are no CDs in CD player, the power is automatically turned on and "NO DISC" appears on the display in Normal Play mode. The CD Player is in stop mode.

■ Press a DISC button (1 to 3).
- If there is a CD in the disc tray for the selected disc number, the power is automatically turned on and playback starts from the selected CD.
- If there are no CDs in CD Player, the power is automatically turned on and "NO DISC" appears on the display in Normal Play mode. The CD Player is set to stop mode.

■ Press the ▲ button.
- The power turns on, and the tray opens automatically.

Loading Discs

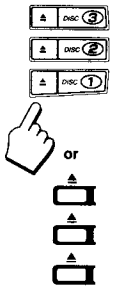

1. Press the ▲ button on the left of the Disc button you want to insert the disc into.
The disc tray slides out automatically.

2. Place a CD, with its label side up, onto the tray.

ATTENTION: *To avoid malfunctions when you play a CD, set the CD in the right place at the center of the tray.*

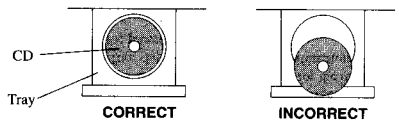

3. Press the ▲ button to close the tray.

4. Repeat steps 1 to 3 to insert other discs into other trays.
- To continue putting discs into other trays, even if a tray is open, by pressing the ▲ button of another disc tray, the open tray will close automatically, and the new disc tray will slide out.

■ To put an 8 cm CD into a tray, insert it so that it is aligned with the groove in the tray's centre.
■ If a tray is open when the System switches to Standby mode, the tray is closed automatically.
■ If the CD cannot be read correctly (due to scratches etc.), "00 00000" appears on the display.

Basics of Using the CD Player — Normal Play

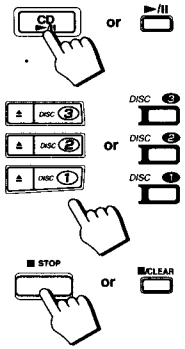

Playing a Disc

1. Prepare the discs.

2. Press the CD ►/II or DISC button (1-3) of the disc you want to play.
When using the Remote Control, press the ►/II button or the DISC button (1 to 3).
The first track of the selected disc will begin playing.
The CD Player automatically stops when the playback finishes the last track of the CD.
- If these buttons are pressed while the tray is open, the tray is automatically closed and playback starts.

To stop play the disc, press the ■ STOP button (or the ■/CLEAR button on the Remote Control).
To stop play and remove the disc, press the ≜ button for the disc being played.
To pause, press the CD ►/II button (or the ►/II button on the Remote Control). The playing time display will blink.
To cancel pause, press the CD ►/II button again (or press the ►/II button on the Remote Control). Play continues from the point where it was paused.

Selecting a Disc, Track Or Passage Within a Track

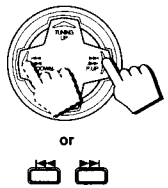

1. Press the DISC button (1-3) for the disc tray containing the track you want to listen to.
- Example: for the third disc, press 3.

2. Press the ⏮/◄◄ P. DOWN or ►►⏭/►► P. UP on the MULTI CONTROL to select the track.
When using the Remote Control, press the ⏮ or ►►⏭ button.
The selected track starts playing.
Each time you briefly press and release the ⏮/◄◄ P. DOWN or ►►⏭/►► P. UP, the track changes by one.
- Press and release the ►►⏭/►► P. UP to go ahead one track at a time.
- Press and release the ⏮/◄◄ P. DOWN to go back one track at a time.

Holding down the ⏮/◄◄ P. DOWN or ►►⏭/►► P. UP button, during playback, will fast forward/backwards the CD so you can quickly find a particular passage in the selection you are listening to.

Locating a Track With the Remote Control Directly

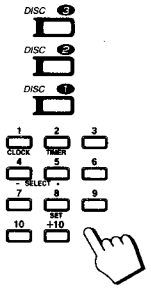

Using the number keys on the Remote Control allows you to go directly to the beginning of any track.

1. Press the DISC button (1-3) for the disc tray containing the track you want to listen to.
- Example: for the third disc, press 3.

2. Enter the number of the track you want to listen to with the number keys.
The selected track starts playing.
- Example: for track 5, press 5. For track 15, press +10 then 5. For track 20, press +10, then 10. For track 32, press +10 three times, then 2.

Changing Discs While Playing

You can replace a CD in a tray not being used, while another CD is playing.

1. Press the ≜ button of the tray not being used.
The tray opens.

2. Replace the disc in the tray.

3. Press the ≜ button to close the tray.

Continuous Play

This function plays the discs in the Unit continuously.

1. Prepare the discs.

2. Select Continuous mode.

On the Unit
Press the CONTINUE button.
The playback automatically starts from the selected CD.
- The CONT. indicator lights up.

You can press the CONTINUE button while a CD is playing to switch to Continuous mode.

On the Remote Control

1. Press the PLAY MODE button while the CD Player is stopped, to select "CONTINUE".
- The CONT. indicator lights up.
  Each time you press the button, CD play mode changes as follows:

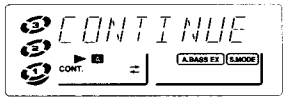

→ PROGRAM → RANDOM → CONTINUE → No play mode display → (back to the beginning)

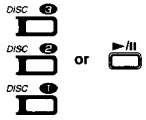

2. Press the DISC button (1 to 3) or ►/II button.
Playback starts from the selected CD.

Playing order of the CDs
The selected CDs are played continuously in the following order.
→ DISC 1 → DISC 2 → DISC 3 → (back to the beginning)

To cancel Continuous play, press the CONTINUE button again. The "CONT." indicator on the display goes out and Normal Play is resumed. When using the Remote Control, press the PLAY MODE button while the CD Player is stopped to select a different Play mode. The "CONT." indicator goes out and the next Play mode is selected.

Programming the Playing Order of the Tracks

You can change the order in which the discs and tracks play, and select only the discs and tracks you want from among those loaded in the CD Player.
- You can program up to 20 steps in any desired order from among the discs in the CD player.
- You can only make a program when the CD Player is stopped.
- Use the Remote Control.

1. Press the PLAY MODE button to select "PROGRAM".
Each time you press the button, CD play mode changes as follows:

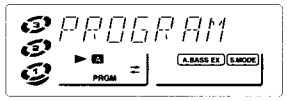

→ PROGRAM → RANDOM → CONTINUE →No play mode display → (back to the beginning)

- The PRGM indicator lights up.
- If a program is already in progress, the last step of the program is displayed.

2. Select a disc with the DISC buttons (1 to 3).
The display changes to the Program Entry display.

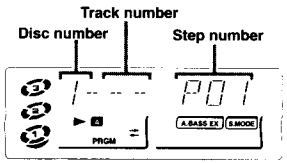

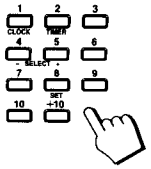

3. Press the number keys (1 to 10 and +10) to select the track to program.
- Example: for track 5, press 5. For track 15, press +10 then 5. For track 20, press +10 then 10.

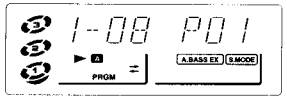

4. Repeat steps 1 to 3 to select the other tracks for the program.

5. Press the ►/II button.
The Unit plays the tracks in the order you have programmed them.

■ If you try to program a disc tray that is empty, or a track number that does not exist on a disc (for example, selecting track 14 on a disc that only has 12 tracks), the selected disc or track are skipped when the program is played.
■ You can skip to a particular program step by pressing the MULTI CONTROL (I◄◄/◄◄ P. DOWN or ►►I/►► P. UP) or the I◄◄ or ►►I button on the Remote Control during program play.
■ To play the programmed tracks over and over, press the REPEAT button . The Repeat mode indicators light up in sequence with each press of the REPEAT button.

To stop playing, press the ■ STOP button (or the ■/CLEAR button on the Remote Control) once.
To delete all the tracks in a program, press the ■ STOP button on the Unit or the ■/CLEAR button on the Remote Control while the CD Player is stopped. The program is deleted and the PRGM indicator goes out and Normal Play is resumed.
To cancel program play, press the PLAY MODE button on the Remote Control while the CD Player is stopped to select a different Play mode. The PRGM indicator goes out and the next Play mode is selected.

Note: If you press the CONTINUE or RANDOM button on the Unit while a program is playing, the play mode changes to that mode.

Random Play

The tracks will play in no special order when you use this mode.

On the Unit
Press the RANDOM button.
The playback automatically starts from the selected CD.
- "RANDOM" on the Play mode indicator lights up.

You can press the RANDOM button while a CD is playing to switch to Random play mode.

On the Remote Control

1. Press the PLAY MODE button while the CD Player is stopped, to select "RANDOM".
- The RANDOM indicator lights up.
  Each time you press the button, CD play mode changes as follows:

  → **PROGRAM** → **RANDOM** → **CONTINUE** → No play mode display → (back to the beginning)

2. Press the ►/II button.
Playback starts from the selected CD.

Note: Random Play cannot be activated with the DISC button (1 to 3) and the number keys.

To skip to the next track, press the ►►I/►► P. UP on the MULTI CONTROL (or the ►►I button on the Remote Control) during playback. Each time you press the button, the next track is jumped to. Press the I◄◄/◄◄ P. DOWN on the MULTI CONTROL (or the I◄◄ button on the Remote Control) to jump to the start of the track being played.

■ Press the REPEAT button before or during random play to instruct the System to continue with a different random track selection after the last selection is played.

To cancel random play, press the RANDOM button again. The RANDOM indicator goes out and Normal Play is resumed. When using the Remote Control, press the PLAY MODE button while the CD Player is stopped to select a different Play mode. The RANDOM indicator goes off and the next Play mode is selected.

Repeating a Selection or the Discs

You can have all the discs, the program or the individual selection currently playing repeat as many times as you like.

Press the REPEAT button.
Each time you press the button, the Repeat Modes changes as follows.

→ ↻ → ↻ **ALL** → No indication → (back to the beginning)

↻ : Repeats one track on a CD.
↻ **ALL**: For Normal Play, repeats all the tracks on the current CD.
For Continuous Play or Random Play, repeats all the tracks on all the CDs in the CD Player.
For Program Play, repeats all the tracks in the program.

To exit Repeat Mode, press the REPEAT button until the Repeat mode indicator on the display goes off.

Tray Lock Function

In order to safely keep the discs in the CD Player, the three trays can be electronically locked in a single operation.
When the electronic lock is on, the trays cannot be opened even if the ≜ button is pressed.
This function can only be accessed by using the buttons on the Unit itself.

Locking the Trays

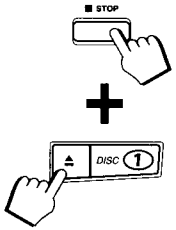

1. Put the System's power into STANDBY mode.

2. While pressing the ■ STOP button, press the ≜ button for DISC 1's tray on the Unit.
"LOCK ON" appears on the display to let you know that the trays have been locked.

LOCK ON

When the CD Player trays are locked, pressing the ≜ buttons displays the message "LOCK ON" on the display and the trays do not open. Also, the ≜ button cannot be used to automatically turn on the power.

Unlocking the Trays

1. Put the System's power into STANDBY mode.

2. While pressing the ■ STOP button, press the ≜ button for DISC 1's tray on the Unit.
When the unlock operation is done, "LOCK OFF" appears on the display to show that the lock has been taken off.

LOCK OFF

The trays can now be opened by pressing the ≜ buttons.
The ≜ button can also be used to automatically turn on the power.

Using the Cassette Deck
(Listening to a Tape)

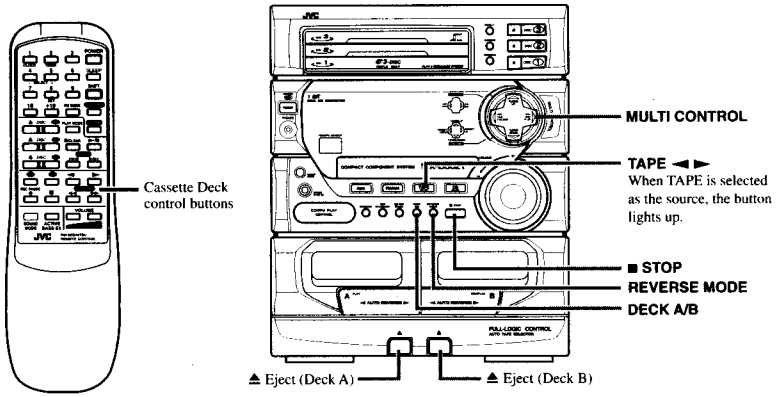

Display

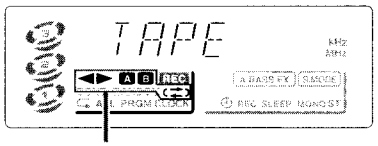

◄► : Tape Direction indicator
A B : DECK A, B indicator
(⇄) : Reverse Mode indicator

Tape Direction Indicator on the Display
The Tape Direction indicator tells you which direction the selected tape deck will use for playback.
During playback, the direction indicator blinks slowly.
During fast left or fast right, the indicator blinks quickly.
During Music Scan mode, the direction indicator alternates between blinking slowly and quickly repeatedly.

When the System is being used, the display shows other items as well. However, we have only shown the items described in this section.

The Cassette Deck allows you to play, record and dub audio tapes.
■ With Automatic Tape Detection, you can listen to Type I or II tapes without changing any settings.

> The use of tapes longer than 120 minutes is not recommended, since characteristic deterioration may occur and these tapes easily jam in the pinch-rollers and the capstans.

COMPU PLAY

One Touch Play

By pressing the TAPE ◄► button (or the ◄ or ► button on the Remote Control), the Unit will turn on, "TAPE" appears on the display, and if a tape is in the deck, it will start to play. If no tape is loaded, the Unit will turn on and wait for you to insert a tape, or select another function.

Regular Play

When the power is already on, you can use this basic procedure:

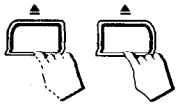

1. Press the ▲ button for the deck you want to use.

2. When the cassette holder opens, put a cassette in, with the exposed part of the tape down, toward the base of the System.
- If the cassette holder does not open, turn the power off, then back on and press the ▲ button again.

3. Close the holder gently.
When both Deck A and Deck B contain a tape, the last deck to have a tape inserted is selected.
To change the selected deck, press the DECK A/B button. When using the Remote Control, press the A or B button.

4. Press the TAPE ◄► button (or ◄ or ► button on the Remote Control).
On the Unit: The tape play starts toward the direction currently selected.
On the Remote Control: The tape play starts toward the same direction as the button is pressed for.
- The Cassette Deck automatically stops when one side of a tape has finished playing.

To stop playing, press the ■ STOP button on the Unit (or the ■ button on the Remote Control).
To remove the tape, stop the tape, and press the ▲ button.
To change deck while playing a tape, press the TAPE ◄► button after pressing the DECK A/B button on the Unit or press the ◄ or ► button after pressing the A or B button on the Remote Control.

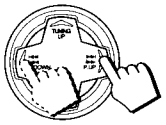

Fast Left And Fast Right

■ While the tape is stopped, press the |◄◄/◄◄ P. DOWN on the MULTI CONTROL (or ◄◄ button on the Remote Control) and the tape will wind rapidly to the left side of the cassette without playing.
■ While the tape is stopped, press the ►►|/►► P. UP on the MULTI CONTROL (or ►► button on the Remote Control) and the tape will wind rapidly to the right side of the cassette without playing.

Note: Deck A and Deck B cannot be used for playback at the same time.

Music Scan

To find the beginning of a music track during play, use the Music Scan function. Music Scan searches for blank portions that usually separate selections, then plays the next selection.

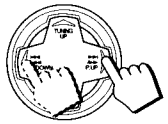

Finding the Beginning of the Current Selection

Press the |◄◄/◄◄ P. DOWN or ►►|/►► P. UP on the MULTI CONTROL (or the ◄◄ or ►► button on the Remote Control) during play.
■ Make sure that you press the |◄◄/◄◄ P. DOWN or ►►|/►► P. UP on the MULTI CONTROL (or the ◄◄ or ►► button on the Remote Control) in the opposite direction to that in which the tape is playing. Searching stops at the beginning of the current selection, and the current selection starts automatically.

Finding the Beginning of the Next Selection

Press the |◄◄/◄◄ P. DOWN or ►►|/►► P. UP on the MULTI CONTROL (or the ◄◄ or ►► button on the Remote Control) during play.
■ Make sure that you press the |◄◄/◄◄ P. DOWN or ►►|/►► P. UP on the MULTI CONTROL (or the ◄◄ or ►► button on the Remote Control) in the same direction as that in which the tape is playing. Searching stops at the beginning of the next selection, and the next selection starts automatically.

Music Scan works by detecting a 4-second long blank at the beginning of each selection, so it will not work well if your tape has:
- No blank at the beginning of a selection .
- Noise (often caused by much use or poor quality dubbing) which fills the blank with noise.
- Long, very soft passages or pauses in a selection. The scan will detect these as 4-second long blanks. If this happens, just scan again until you reach the selection you want.

Reverse Mode

You can play both sides of a cassette, or play both the tapes in the two Cassette Decks continuously.
Press the REVERSE MODE button to switch to Reverse Mode.
Each time you press the button, the Reverse Mode changes as follows:
→ ⇄ → ⇄) (auto reverse mode) → (⇄) (auto reverse mode) → (back to the beginning)

⇄ : The Cassette Deck automatically stops after playing one side of the tape.
⇄) : The Cassette Deck automatically stops after playing reverse (◄) side of the tape being played (or set to play).
(⇄) : After playing both sides of the tape being played (or set to play), the Unit always checks to see if a tape is in the other deck. If there is, it automatically starts playing that tape. This Continuous Play function works regardless of which deck starts first. The tapes are played continuously until the ■ STOP button on the Unit (or the ■ button on the Remote Control) is pressed.

Using the Cassette Deck (Recording)

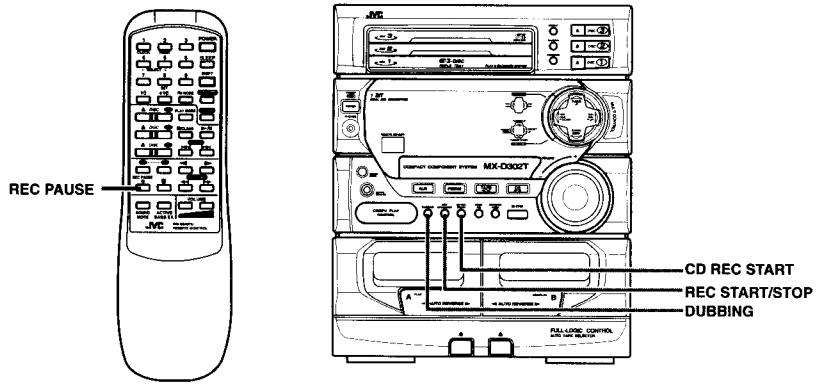

Display

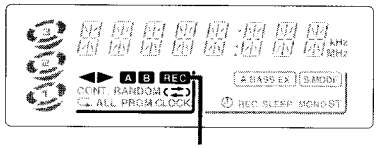

REC indicator

When the System is being used, the display shows other items as well. However, we have only shown the items described in this section.

Things to Know before You Start Recording

- **It should be noted that it may be unlawful to re-record pre-recorded tapes, records, or discs without the consent of the owner of copyright in the sound or video recording, broadcast or cable programme and in any literary, dramatic, musical, or artistic embodied therein.**
- When you want to record onto both sides of a tape, you can set the auto reverse mode on to do so. However, recording automatically stops after recording in the ◄ direction in the auto reverse mode. Therefore, make sure that the tape direction is ► when recording with the auto reverse mode on.
- The recording level, which is the volume at which the new tape is being made, is automatically set correctly, so it is not affected by the VOLUME control on the System. Thus, during recording you can adjust the sound you are actually listening to without affecting the recording level.
- Two small tabs on the back of the cassette tape, one for side A and one for side B, can be removed to prevent accidental erasure or re-recording. To record on a cassette with the tabs removed, you must cover the holes with adhesive tape first.
  However, when a Type II tape is used, only cover part of the hole as shown, since the other part of the hole is used to detect the tape type.
- When recording, you can hear Sound Mode effects through the speakers or headphones. However, the sound is recorded without Sound Mode effects.
- Type I and Type II tapes can be used for recording.

Note: At the start and end of cassette tapes, there is leader tape which cannot be recorded onto. Depending on the recording source, the first part of the recording may be missing because of the leader. When recording CDs or radio broadcasts, to get the beginning of the recording on the tape, first wind on the leader before beginning recording.

CAUTION: If recordings you have made have excessive noise or static, the Unit may be too close to a TV which was on during the recording. Either turn off the TV or increase the distance between the TV and the System.

Standard Recording

This is the basic method for recording any source. The System also has special ways for recording CD to tape, and tape to tape, which save you time and effort, as well as give you some special effects. However, when you need to add a selection to a tape you have made, or are combining selections from several sources on one tape, use the method described below; just substitute the source you want into this procedure, such as a CD or the Tuner. You can also record from auxiliary source with this procedure.

Using the Unit

1. Insert a blank or erasable tape into Deck B.

2. Press the REVERSE MODE button if you want to record on both sides of the tape.
Press the button until the "⇄" or "(⇄)" indicator is lit.
- When using the auto reverse mode, insert the tape so that it will be recorded in the forward (►) direction.

3. Check the recording direction for the tape.
Check that the Tape Direction indicator is the same as that for the tape in the tape deck. If the directions are different, press the ■ STOP button after pressing the TAPE ◄ ► button to set the tape direction.
- When using the auto reverse mode to record both sides of a tape, check that the Tape Direction indicator is in the forward (►) direction. If the direction indicator is not in the forward (►) direction, press the TAPE ◄ ► button then press the ■ STOP button.

4. Prepare the source, for example, by tuning in a radio station, loading CDs, or turning on connected equipment.

5. Press the REC START/STOP button.
The REC indicator lights up and the System begins recording.

Using the Remote Control

1. Insert a blank or erasable tape into Deck B.

2. Press the REVERSE MODE button on the Unit if you want to record on both sides of the tape.
Press the button until the "⇄" or "(⇄)" indicator is lit.
- When using the auto reverse mode, insert the tape so that it will be recorded in the forward (►) direction.

3. Prepare the source, for example, by tuning in a radio station, loading CDs, or turning on connected equipment.

4. Press the REC PAUSE ● button.
The REC indicator blinks.

5. Press the ◄ or ► button.
Recording starts in the direction of the button pressed.
The REC indicator stops blinking and remains lit.
- When using the auto reverse mode to record both sides of a tape, press the ► button.

Notes for using Reverse Mode for recording

When recording in Reverse Mode, the System automatically stops when it reaches the end of the reverse (◄) direction. To record on both sides of a tape, make sure that the recording direction for the tape inserted into Deck B is forward (►), and that the Tape Direction indicator is also forward (►), before you start recording.

To Pause at Any Time During the Recording Process

Press the REC PAUSE ● button on the Remote Control. Then press either the ◄ or ► button on the Remote Control or REC START/STOP button on the Unit to restart recording.

To Stop at Any Time During the Recording Process

Press the REC START/STOP button on the Unit again, or press the ■ button on the Remote Control.

Recording AM Station to Tape

When recording an AM broadcast, beats may be produced which are not heard when listening to the broadcast. In this case, press the CONTINUE button on the CD Player to eliminate the beats.

1. Set to AM station and start recording.

2. Press the CONTINUE button repeatedly until the beats are eliminated.
Each time you press the button, the display changes as follows:
→ CUT 2 → CUT 3 → CUT 1 → (back to the beginning)

CD Direct Recording

Everything on the CD goes onto the tape in the order it is on the CD, or according to the order you have set in a program.

1. Press the CD ►/II button, then the ■ STOP button.

2. Prepare CDs. (See page 13.)
Check that source is the CD Player and be not playing a CD.

3. Insert a cassette in Deck B to record on.
- When you want to record on both sides of a tape, press the REVERSE MODE button to turn on the auto reverse mode. Check that the recording direction for the tape and the Tape Direction indicator are correct. (See page 21 "Notes for using Reverse Mode for recording".)

4. Press the CD REC START button.
The REC indicator lights up and the System begins recording.
If you make a recording with the auto reverse mode on, the Unit will record the last song at the end of the first side at the beginning of the next side.

To stop at any time during the recording process, press the ■ STOP button.

Note: When making Sleep Timer settings while doing CD Direct recording, set the time so that there is enough leeway to finish the recording before the power goes off. If the time is set to about the length of the CD, the power may go off before recording finishes.

> For CD Direct Recording using more than one disc, use a blank tape. If you use a prerecorded tape, prerecorded material may not be erased between newly-recorded tracks.

Tape to Tape Recording (Dubbing)

Recording from one tape to another is called dubbing.
You can dub tapes simply, with just a single button.

- When dubbing tapes, make sure that the playback direction of Deck A and Deck B are the same.
- When you record both sides of a tape, press the REVERSE MODE button to turn on the auto reverse mode.
- It is preferable that the type of tape (Type I or Type II) you record from be the same as the type you record onto.

How to Use the DUBBING Button

1. Press the TAPE ◄► button, then the ■ STOP button.

2. Insert the source cassette you want to copy from into Deck A for playback.
Insert the cassette so that it will be played in the forward (►) direction.

3. Insert the blank or erasable cassette you want to copy onto into Deck B for recording.
Insert the cassette so that it will be recorded in the forward (►) direction.

4. Press the DUBBING button.
Deck A and Deck B will start simultaneously.

To stop dubbing, press the ■ STOP button.

- When dubbing with the DUBBING button, you can hear Sound Mode effects through the speakers or headphones. However, the sound is dubbed without Sound Mode effects.

Using the Timer

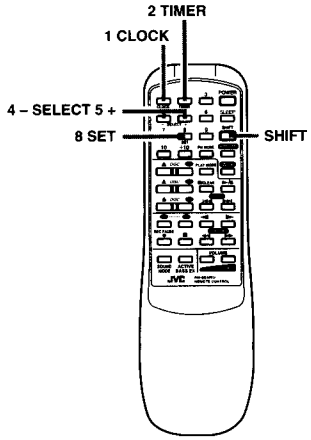

Display

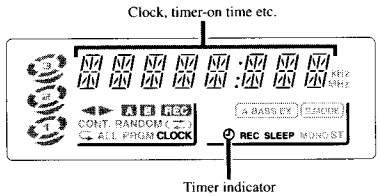

When the System is being used, the display shows other items as well. However, we have only shown the items described in this section.

The timers let you control listening and recording functions automatically.
Use the Remote Control to set the clock and timers.

Setting the Clock

The timers depend on the clock: the clock must be right for the timers to work as you expect.
You can set the clock whether the Unit is on or off.
Note that the clock must be set, otherwise the timers cannot be set.

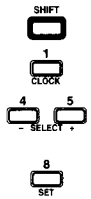

1. Press the SHIFT button.

2. Press the 1 CLOCK button.
The CLOCK indicator on the display lights up and the clock time blinks.

3. Press the SELECT 5 + or 4 – button to set the time.
Pressing the 5 + button increases the time and pressing 4 – decreases the time. Pressing the button continuously advances or decreases the time in 10 minute intervals.

4. Press the 8 SET button.
The clock stops blinking, and the clock timer starts from 0 seconds.

CAUTION: If there is a power failure, the clock loses its setting. The display shows "AM12:00", and the clock must be reset.

Setting the Timer

■ You can set the Timer whether the Unit is on or off.

Procedure For Setting the Timer

1. Press the SHIFT button.

2. Press the 2 TIMER button.
The Timer indicator on the display lights up and the blinking "TIMER ON" changes to the On-Time setting display.

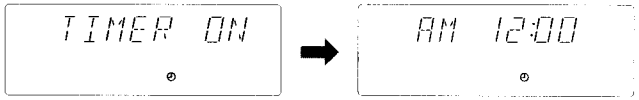

3. Set the time you want the Unit to come on.
Press the SELECT 5 + or 4 – button to set the On-Time.

4. Press the 8 SET button.
"TIMER OFF" blinks on the display, and the display changes to the Off-Time setting display.

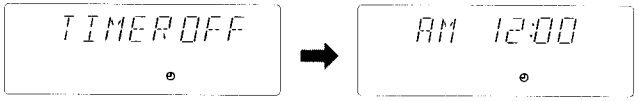

5. Set the time you want the Unit to turn off.
Press the SELECT 5 + or 4 – button to set the Off-Time.

6. Press the 8 SET button.
The name of the source blinks in the display.

7. Press the SELECT 5 + or 4 – button to select the source.
Each time you press the button, the source changes as follows:

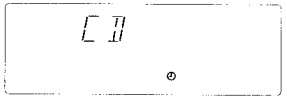

↔ TUNER ↔ TUNER REC ↔ CD ↔ TAPE ↔

TUNER: Selects the last station you were listening to.
TUNER REC: Records the last station you were listening to.
CD: Plays the last CD you were listening to.
TAPE: Plays the last tape you were listening to.

- In the source "TUNER", "CD", or "TAPE", the timer acts as a Daily timer. Once the Daily timer has been set, it will be activated at the same time every day until the setting is turned off.
  In the source "TUNER REC", the timer acts as a Once timer. After the Once timer has been performed, the details of the setting remain stored but the Timer status is set to off.

8. Press the 8 SET button.
The volume level blinks on the display.

9. Press the SELECT 5 + or 4 – button to set the volume level.

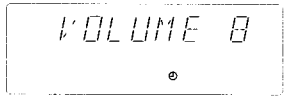

10. Press the 8 SET button.
The display returns to the display before you set the timer.

Before Turning the Unit Off

■ Check that the selected source is ready.
■ If you will be recording a source while you are out, set the volume to 0.

To turn the Timer off, press the 2 TIMER button after pressing the SHIFT button. The Timer indicator on the display goes out.

Setting the Sleep Timer

Use the Sleep Timer to turn the Unit off after a certain number of minutes when it is playing. By setting this timer, you can fall asleep to music and know your Unit will turn off by itself rather than play all night.

■ You can only set the Sleep Timer when the Unit is on and a source is playing.

To set the Sleep Timer, follow this procedure:

1. With the System on and a source playing, press the SLEEP button on the Remote Control.

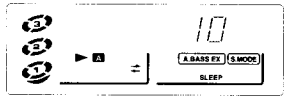

2. Set the length of time you want the source to play before shutting off.

- Each time you press this button,the number of minutes shown on the display changes as follows:

→ 10 → 20 → 30 → 60 → 90 → 120 → Canceled → (back to the beginning)

When the number of minutes you want are shown on the display, just wait 5 seconds until the number of minutes stops blinking and remains lit.
The Unit is now set to turn off after the number of minutes you set.

To Change the Sleep Timer Setting

Press the SLEEP button until the number of minutes you want appears on the display.

To Cancel the Sleep Timer Setting

Press the SLEEP button until the SLEEP indicator goes off on the display.
Turning off the Unit also cancels the Sleep Timer.

Care And Maintenance

Compact Discs

Handle your compact discs, cassette tapes, and Cassette Deck carefully, and they will last a long time.

- Remove the CD from the case by holding it at the edges while pressing the centre hole lightly.
- Do not touch the shiny surface of the CD, or bend the CD.

- Put the CD back in its case after use to prevent warping.
- Be careful not to scratch the surface of the CD when placing it back in the case.
- Avoid exposure to direct sunlight, temperature extremes, and moisture.

- A dirty CD may not play correctly. If a CD does become dirty, wipe it with a soft cloth in a straight line from centre to edge.

CAUTION: Do not use any solvent (for example, conventional record cleaner, spray thinner, benzine, etc.) to clean a CD.

Moisture Condensation

Moisture may condense on the lens inside the Unit in the following cases:

- After starting the heating in the room.
- In a damp room.
- If the Unit is brought directly from a cold to a warm place.

Should this occur, the Unit may malfunction. In this case, leave the Unit turned on for a few hours until the moisture evaporates, unplug the AC power cord, and then plug it in again.

General Notes

In general, you will have the best performance by keeping your tapes, CDs, and the mechanism clean.

- Store tapes and CDs in their cases, and keep them in cabinets or on shelves.
- Keep the Cassette Deck's tape doors and the CD trays closed when not in use.

Cassette Tapes

- If the tape is loose in its cassette, take up the slack by inserting a pencil in one of the reels and rotating.
- If the tape is loose, it may get stretched, cut, or caught in the cassette.

- Do not touch the tape surface.

- Do not store the tape:
  - In dusty places
  - In direct sunlight or heat
  - In moist areas
  - On a TV or speaker
  - Near a magnet

Cassette Deck

- If the heads, capstans, and pinch-rollers of the Cassette Deck become dirty, the following will occur:
  - Loss of sound quality
  - Discontinuous sound
  - Fading
  - Incomplete erasure
  - Difficulty recording
- Clean the heads, capstans, and pinch-rollers using a cotton swab moistened with alcohol.

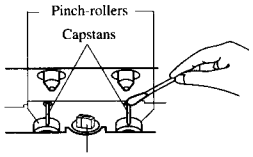

- If the heads become magnetized, the Unit will produce noise or lose high frequencies.
- To demagnetize the heads, turn off the Unit, and use a head demagnetizer (available at electronics and record shops).

Troubleshooting

- If you are having a problem with your System, check this list for a possible solution before calling for service.
- If you cannot solve the problem from the hints given here, or the Unit has been physically damaged, call a qualified person, such as your dealer, for service.

Symptom	Possible Cause	Action
No sound is heard.	Connections are incorrect, or loose.	Check all connections and make corrections. (See pages 4 - 5.)
Unable to record.	Cassette record protect tabs are removed.	Cover holes on back edge of cassette with tape.
Poor radio reception	• The antenna is disconnected. • The AM Loop Antenna is too close to the Unit. • The FM Wire Antenna is not properly extended and positioned.	• Reconnect the antenna securely. • Change the position and direction of the AM Loop Antenna. • Extend FM Wire Antenna to the best reception position.
The CD skips.	The CD is dirty or scratched.	Clean or replace the CD.
Unable to operate the Remote Control.	• The path between the Remote Control and the sensor on the Unit is blocked. • The batteries have lost their charge.	• Remove the obstruction. • Replace the batteries.
The CD tray cannot be opened.	The main AC power cord is not plugged in.	Plug in the AC power plug.
The CD does not play.	The CD is upside down.	Put the CD in with the label side up.
Operations are disabled.	The built-in microprocessor has malfunctioned due to external electrical interference.	Unplug the Unit then plug it back in.
The cassette door cannot be opened.	During tape playing, the power cord was unplugged.	Plug in the power cord, press the POWER button, and then press the ⏏ button.

QUALITY **JVC** SERVICE

HOW TO LOCATE YOUR JVC SERVICE CENTER

TOLL FREE : 1-800-537-5722

Dear customer:
In order to receive the most satisfaction from your purchase, read the instruction booklet before operating the unit. In the event that repair is necessary, or for the address nearest your location, please refer to the factory service center list below or within the Continental United States, Call 1-800-537—5722 for your authorized servicer. Remember to retain you Bill of Sale for Warranty Service.

—JVC

JVC SERVICE & ENGINEERING COMPANY OF AMERICA
DIVISION OF US JVC CORP.

FACTORY SERVICE CENTER LOCATIONS

107 Little Falls Road
Fairfield, NJ 07004-2105
(201) 808-9279

1500 Lakes Parkway
Lawrenceville, GA 30243-5357
(770) 339-2522

705 Enterprise Street
Aurora, IL 60504-8149
(630) 851-7855

5665 Corporate Avenue
Cypress, CA 90630-0024
(714) 229-8011

2969 Mapunapuna Place
Honolulu, HI 96819-2040
(808) 833-5828

10700 Hammerly, Suite 110
Houston, TX77043
(713) 935-9331

230 Eliot Street
Ashland, MA 0172-2377
(508) 881-5923

14505 Commerce Way
Miami Lakes, FL 33016-1512
(305) 362-6252

890 Dubuque Avenue
South San Francisco, CA 94080-1804
(415) 871-2666

Sophisticated electronic products may require occasional service. Just as quality is a keyword in the engineering and production of the wide array of JVC products, service is the key to maintaining the high level of performance for which JVC is world famous. The JVC service and engineering organization stands behind our products.

NATIONAL HEADQUARTERS
JVC SERVICE & ENGINEERING COMPANY OF AMERICA
DIVISION OF US JVC CORP.
107 Little Falls Road
Fairfield, NJ 07004-2105

If you ship the product • • •

Pack your JVC unit in the original carton or one of equivalent size and strength. Enclose, with the unit, a letter stating the problem or symptom that exists and also a copy of the receipt or bill of sale you received when you purchased your JVC unit. Print your home return address on the outside and the inside of the carton. Send to the appropriate JVC Factory Service Center as listed above.

Don't service it yourself.

CAUTION

To prevent electrical shock, do not open the cabinet. No user serviceable parts inside.
Refer servicing to qualified service personnel.

ACCESSORIES

To purchase accessories for your JVC product, you may contact your local JVC Dealer.
Or from the 48 Continental United States call toll free : 800-882-2345

(0694)

JVC LIMITED WARRANTY AUDIO-1

JVC COMPANY OF AMERICA warrants this product and all parts thereof, except as set forth below ONLY TO THE ORIGINAL PURCHASER AT RETAIL to be FREE FROM DEFECTIVE MATERIAL AND WORKMANSHIP from the date of original retail purchase for the period as shown below. ("The Warranty Period.")

PARTS	LABOR
1YR	1YR

THIS LIMITED WARRANTY IS VALID ONLY IN THE FIFTY(50) UNITED STATES, THE DISTRICT OF COLUMBIA AND IN COMMONWEALTH OF PUERTO RICO.

WHAT WE WILL DO:
If this product is found to be defective, JVC will repair or replace defective parts at no charge to the original owner. Such repair and replacement services shall be rendered by JVC during normal business hours at JVC authorized service centers. Parts used for replacement are warranted only for the remainder of the Warranty Period. All products and parts thereof may be brought to a JVC authorized service center on a carry-in basis except for Television sets having a screen size 25 inches and above which are covered on an in-home basis.

WHAT YOU MUST DO FOR WARRANTY SERVICE:
Return your product to a JVC authorized service center with a copy of your bill of sale. For your nearest JVC authorized service center, please call toll free: (800)537-5722.
If service is not available locally, box the product carefully, preferably in the original carton, and ship, insured, with a copy of your bill of sale plus and letter of explanation of the problem to the nearest JVC Factory Service Center, the name and location of which will be given to you by the toll-free number.
If you have any questions concerning your JVC Product, please contact our Customer Relations Department.

WHAT IS NOT COVERED:
This limited warranty provided by JVC does not cover:

1. Products which have been subject to abuse, accident, alteration, modification, tampering, negligence, misuse, faulty installation, lack of reasonable care, or if repaired or serviced by anyone other than a service facility authorized by JVC to render such service, or if affixed to any attachment not provided with the products, or if the model or serial number has been altered, tampered with, defaced or removed;
2. Initial installation and installation and removal for repair;
3. Operational adjustments covered in the Owner's Manual, normal maintenance, video and audio head cleaning;
4. Damage that occurs in shipment, due to act of God, and cosmetic damage;
5. Signal reception problems and failures due to line power surge;
6. Video Pick-up Tubes/CCD Image Sensor, Cartridge, Stylus(Needle) are covered for 90 days from the date of purchase;
7. Accessories;
8. Batteries (except the Rechargeable Batteries are covered for 90 days from the date of purchase);

There are no express warranties except as listed above.

THE DURATION OF ANY IMPLIED WARRANTIES, INCLUDING THE IMPLIED WARRANTY OF MARCHANTABILITY, IS LIMITED TO THE DURATION OF THE EXPRESS WARRANTY HEREIN.

JVC SHALL NOT BE LIABLE FOR THE LOSS OF USE THE PRODUCT, INCONVENIENCE, LOSS OR ANY OTHER DAMAGES, WHETHER DIRECT, INCIDENTAL OR CONSEQUENTIAL (INCLUDING, WITHOUT LIMITATION, DAMAGE TO TAPES, RECORDS OR DISCS) RESULTING FROM THE USE OF THIS PRODUCT, OR ARISING OUT OF ANY BREACH OF THIS WARRANTY. ALL EXPRESS AND IMPLIED WARRANTIES, INCLUDING THE WARRANTIES OF MERCHANTABILITY AND FITNESS FOR PARTICULAR PURPOSE, ARE LIMITED TO THE WARRANTY PERIOD SET FORTH ABOVE.

Some states do not allow the exclusion of incidental or consequential damages or limitations on how long an implied warranty last, so these limitations or exclusions may not apply to you. This warranty gives you specific legal rights and you may also have other rights which vary from state to state.

JVC COMPANY OF AMERICA
DIVISION OF US JVC CORP.
41 Slater Drive
Elmwood Park, New Jersey 07407

REFURBISHED PRODUCTS CARRY A SEPARATE WARRANTY, THIS WARRANTY DOES NOT APPLY. FOR DETAILS OF REFURBISHED PRODUCT WARRANTY, PLEASE REFER TO THE REFURBISHED PRODUCT WARRANTY INFORMATION PACKAGED WITH EACH REFURBISHED PRODUCT.

For customer use:

Enter below the Model No. and Serial No. which is located either on the rear, bottom or side of the cabinet. Retain this information for future reference.

Model No.: _____ Serial No.: _____

Purchase date: _____ Name of dealer: _____

Discription of Majar ICs

■UPD78044FGF-067(IC701):System Control Micon

1.Trminal Layout

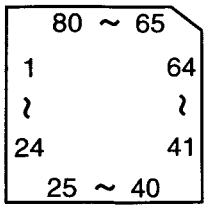

2.Pin Function

Pin No.	Symbol	I/O	Function	Pin No.	Symbol	I/O	Function
1~7	7G~1G	O	FL Grid control signal	39	$\overline{+BCTL}$	O	5V switch
8	VDD	-	Power supply +5V	40	MLCK	O	Clock signal to IC603
9	SCKO	O	Serial Clock (PLL.SLC.Vol.C3)	41	$\overline{XRST}$	O	Reset signal to IC603
10	SDATAO	O	Serial data (PLL.SLC.Vol.C3)	42	MLD	O	Micon command load signal to IC603
11	$\overline{FAUX}$	O	AUX Indicator control	43	MDATA	O	Micon command data to IC603
12	$\overline{LED\ TAPE}$	O	TAPE Indicator control	44	CHST	O	Strobe changer control
13	STTA	O	Strobe Tape control	45	STATUS /RDSCLK	I	CD status(PO) / RDS CLK(INT)
14	SQCK	O	Sub code clock				
15	NC	-	Non connect	46	POUT	O	Power on/off
16	SUBQ	I	Sub code data	47	REM	I	Remote control
17	$\overline{REST}$	I	System reset signal	48	ICVss	-	To ground
18	PHOTO A	I	Tape A mechanism running detection	49	$\overline{SMUTE}$	O	System mute
19	PHOTO B	I	Tape B mechanism running detection	50	F.CD	O	Function CD
20	AVss	-	AD Ground	51	F.TU	O	Function TUNER
21	REST/REQ	I	Reset switch / Changer request	52	Vdd	-	Power supply +5V
22	SAFETY1	I	Trouble detection	53	VOL-	I	Volume encorder input (-)
23	SLC KEY1	I	Tape A playback detect switch	54	VOL+	I	Volume encorder input (+)
24	SLC KEY2	I	Tape B playback detect switch	55	SPK	O	Speaker relay control signal
25	SLC KEY3	I	Tape B playback/REC detect switch	56	PROTECTOR	I	Protector input
26~28	KEY3~1	I	Key matrix input	57	BACKUP	I	Backup detect
29	AVdd	-	AD+5V	58	LATCH	O	Latch signal to IC302
30	AVREF	-	AD REF + 5V	59	PERIOD	O	Tuner PLL strobe
31	XT1	I	Sub clock 32.768kHz	60~70	S1~S11	O	FL segment control signal
32	XT2	O	Sub clock 32.768kHz	71	VLOAD	-	
33	Vss	-	To ground	72~76	S12~S16	O	FL segment control signal
34	X1	I	Main clock 4.19MHz	77~79	11G1~9G1	O	FL grid control signal
35	X2	O	Main clock 4.19MHz	80	8G	O	FL grid control signal
36	BEAT	O	Main clock shift				
37	MSI	I	Music scan				
38	$\overline{MPX}$	I	Stereo detect				

■ MN35510(IC603):DIGITAL SERVO&DIGITAL SIGNAL PROCESSER

1. Terminal Layout

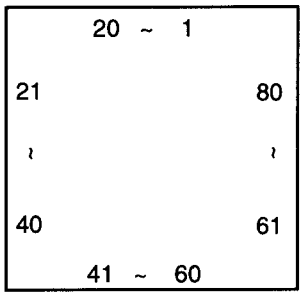

2.Block Diagram

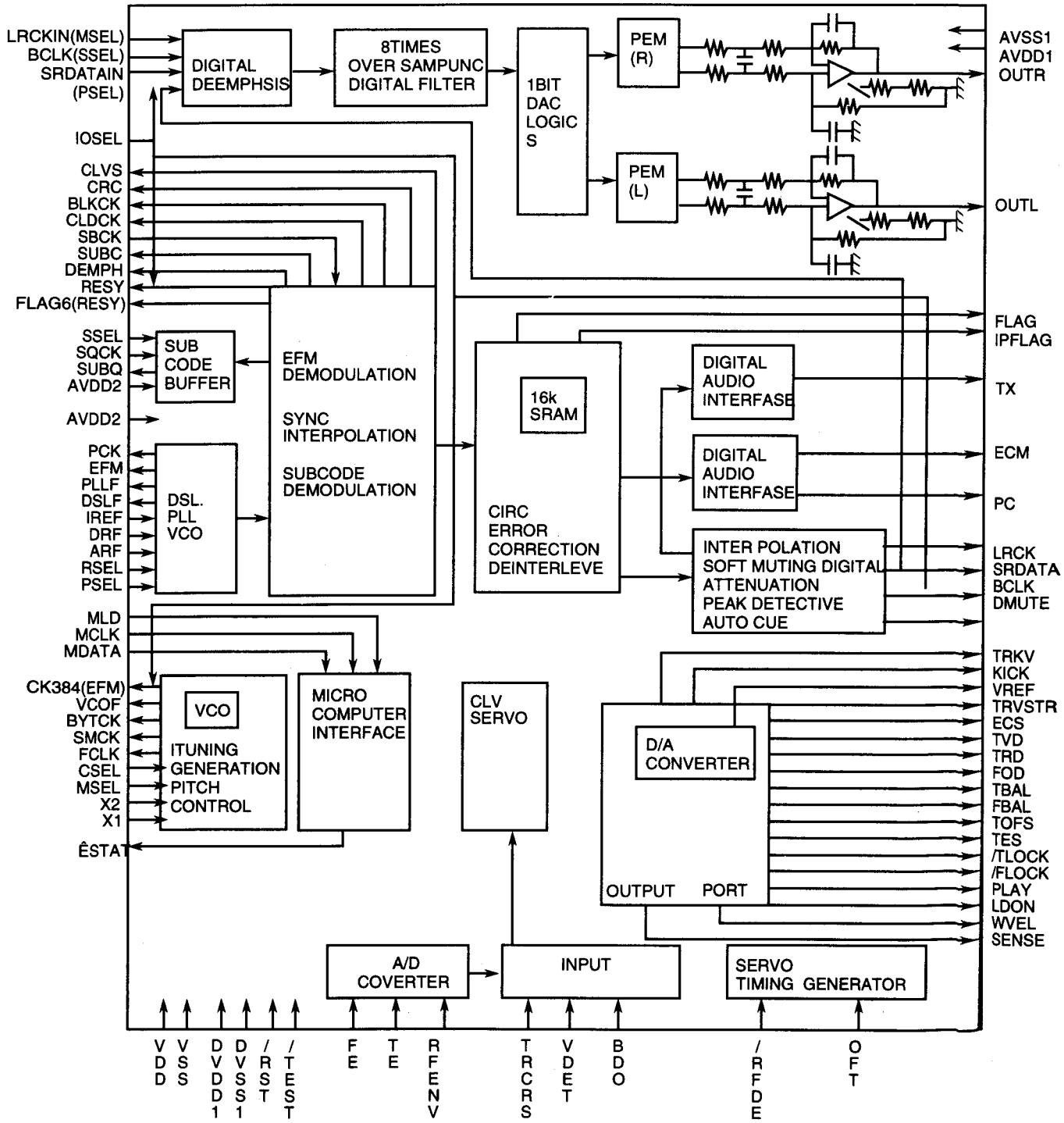

3. Description

Pin No.	symbol	I/O	Description	Pin No.	symbol	I/O	Description
1	BCLK	O	Not used	41	TES	O	Tracking error shunt signal output(H:shunt)
2	LRCK	O	Not used	42	PLAY	–	Not used
3	SRDATA	O	Not used	43	WVEL	–	Not used
4	DVDD1	–	Power supply (Digital)	44	ARF	I	RF signal input
5	DVSS1	–	Connected to GND	45	IREF	I	Reference current input pin
6	TX	O	Digital audio interface output	46	DRF	I	Bias pin for DSL
7	MCLK	I	μcom command clock signal input (Data is latched at signal's rising point)	47	DSLF	I/O	Loop filter pin for DSL
8	MDATA	I	μcom command data input	48	PLLF	I/O	Loop filter pin for PLL
9	MLD	I	μcom command load signal input	49	VCOF	–	Not used
10	SENSE	O	Sence signal output	50	AVDD2	–	Power supply(Analog)
11	FLOCK	O	Focus lock signal output Active :Low	51	AVSS2	–	Connected to GND(Analog)
12	TLOCK	O	Tracking lock signal output Active :Low	52	EFM	–	Not used
13	BLKCK	O	sub-code·block·clock signal output	53	PCK	–	Not used
14	SQCK	I	Outside clock for sub-code Q resister input	54	PDO	–	Not used
15	SUBQ	O	Sub-code Q -code output	55	SUBC	–	Not used
16	DMUTE	–	Connected to GND	56	SBCK	–	Not used
17	STATUS	O	Status signal (CRC,CUE,CLVS,TTSTOP,ECLV,SQOK)	57	VSS	–	Connected to GND(for X'tal oscillation circuit)
18	RST	I	Reset signal input (L:Reset)	58	XI	I	Input of 16.9344MHz X'tal oscillation circuit
19	SMCK	–	Not used	59	X2	O	Output of X'tal oscillation circuit
20	PMCK	–	Not used	60	VDD	–	Power supply(for X'tal cscillation circuit)
21	TRV	O	Traverse enforced output	61	BYTCK	–	Not used
22	TVD	O	Traverse drive output	62	CLDCK	–	Not used
23	PC	–	Not used	63	FLAG	–	Not used
24	ECM	O	Spindle motor drive signal (Enforced mode output) 3-State	64	IPPLAG	–	Not used
25	ECS	O	Spindle motor drive signal (Servo error signal output)	65	FLAG	–	Not used
26	KICK	O	Kick pulse output	66	CLVS	–	Not used
27	TRD	O	Tracking drive output	67	CRC	–	Not used
28	FOD	O	Focus drive output	68	DEMPH		Not used
29	VREF	I	Reference voltage input pin for D/A output block (TVD,FOD,FBA,TBAL)	69	RESY	–	Not used
30	FBAL	O	Focus Balance adjust signal output	70	IOSEL	–	pull up
31	TBAL	O	Tracking Balance adjust signal output	71	TEST	–	pull up
32	FE	I	Focus error signal input(Analog input)	72	AVDD1	–	Power supply(Digital)
33	TE	I	Tracking error signal input(Analog input)	73	OUT L	O	Lch audio output
34	RF ENV	I	RF envelope signal input(Analog input)	74	AVSS1	–	Connected to GND
35	VDET	I	Vibration detect signal input(H:detect)	75	OUT R	O	Rch audio output
36	OFT	I	Off track signal input(H:off track)	76	RSEL	–	pull up
37	TRCRS	I	Track cross signal input	77	CSEL	–	Connected to GND
38	RFDET	I	RF detect signal input(L:detect)	78	PSEL	–	Connected to GND
39	BDO	I	BDO input pin(L:detect)	79	MSEL	–	Connected to GND
40	LDON	O	Laser ON signal output(H:on)	80	SSEL	–	Pull up

■ AN8806SB(IC601):RF&Servo AMP

1.Treminal Layout

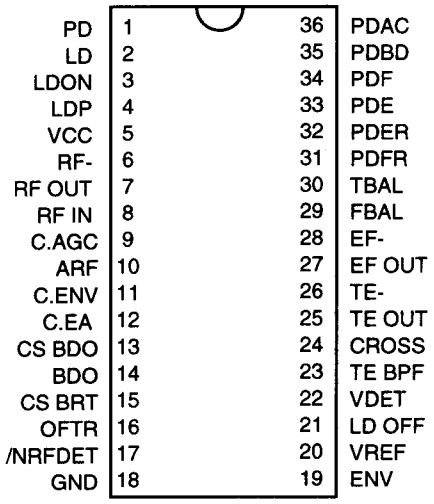

2.Block Diagram

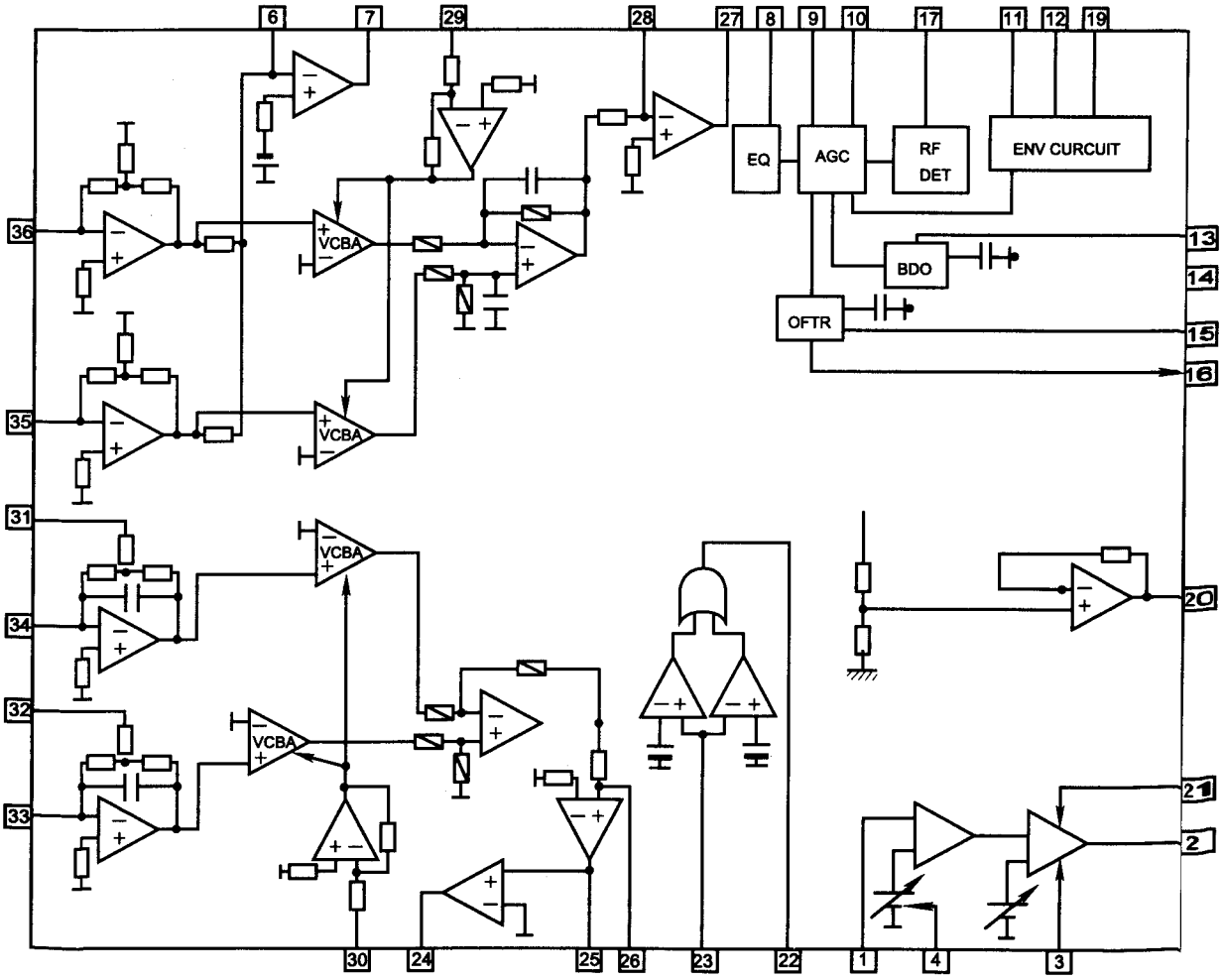

3. Functions

Pin No.	Symbol	I/O	Functions and operations
1	PD	I	APC amp input terminal
2	LD	O	APC amp output terminal
3	LD ON	I	APC ON/OFF control terminal
4	LDP	--	Connect to ground
5	VCC	--	Power supply
6	RF-	I	Inverse input pin for RF amp
7	RF OUT	O	RFamp output
8	RF IN	I	RF input
9	C.AGC	I/O	Connecting pin of AGC loop filter
10	ARF	O	RF output
11	C.ENV	I/O	A capacitor is connected to this terminal to detect the envelope of RF signal
12	C.EA	I/O	A capacitor is connected to this terminal to detect the envelope of RF signal
13	CS BDO	I/O	A capacitor is connected to detect the lower envelope of RF signal
14	BDO	O	BDO output pin
15	CS BRT	I/O	A capacitor is connected to detect the lower envelope of RF signal
16	OFTR	O	Of-track status signal output
17	/NRFDET	O	RF detection signal output
18	GND	--	Ground
19	ENV	O	Envelope output
20	VREF	O	Reference voltage output
21	LD OFF	--	Connect to ground
22	VDET	O	Vibration detection signal output
23	TE BPF	I	Input pin of tracking error through BPF
24	CROSS	O	Tracking error cross output
25	TE OUT	O	Tracking error signal output
26	TE-	I	Inverse input pin for tracking error amp
27	FE OUT	O	Output pin of focus error
28	FE-	I	Inverse input pin for focus error amp
29	FBAL	I	Focus balance control
30	TBAL	I	Tracking balance control
31	PDFR	I/O	F I-V amp gain control
32	PDER	I/O	E I-V amp gain control
33	PDF	I	I-V amp input
34	PDE	I	I-V amp input
35	PD BD	I	I-V amp input
36	PD AC	I	I-V amp input

■UPD65612GB-177(IC801):CD Changer Control Micon

1.Trminal Layout

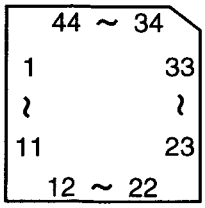

2.Pin Function

Pin No.	Symbol	I/O	Function	Pin No.	Symbol	I/O	Function
1	NC	-	Non connect	24	1SSW	I	Switch input signal to TRAY 1
2	NC	-	Non connect	25	NC	-	Non connect
3	MSPOSI	-	Non connect	26	CAM0	I	Switch input signal for LCAM
4	OS1I	I	Oscillation input terminal	27	CAM1	I	Switch input signal for LCAM
5	OS1O	O	Oscillation output terminal	28	CAM2	I	Switch input signal for LCAM
6	OS2I	I	Oscillation input terminal	29	CAM3	I	Switch input signal for LCAM
7	OS2O	O	Oscillation output terminal	30	CAM4	I	Switch input signal for RCAM
8	NC	-	Non connect	31	CAM5	I	Switch input signal for RCAM
9	C12IN	I	Connect to C12 OUT terminal	32	CAM6	I	Switch input signal for RCAM
10	C12OUT	O	Connect to C12 IN terminal	33	CAM7	I	Switch input signal for RCAM
11	RESET	I	Reset signal input	34	FIT	O	Connect to C50
12	REQB	O	Mecha.data.request output	35	C50	I	Connect to FIT
13	DATA	I/O	Control.status.data. I/O	36	LMUP	O	Motor control signal for L
14	STCH	I	Strobe signal input	37	LMDWN	O	Motor control signal for L
15	CKS	I	Clock signal input	38	C25	-	Non connect
16	SELECT	-	Connect to ground	39	VDD	-	Power supply
17	GND	-	Connect to ground	40	C100	-	Non connect
18	CK	-	Connect to ground	41	RMUP	O	Motor control signal for R
19	1MSW	I	Switch input signal to TRAY 1	42	RMDWN	O	Motor control signal for R
20	2MSW	I	Switch input signal to TRAY 2	43	NC	-	Non connect
21	3MSW	I	Switch input signal to TRAY 3	44	NC	-	Non connect
22	3SSW	I	Switch input signal to TRAY 3				
23	2SSW	I	Switch input signal to TRAY 2				

■TA8409S(IC802.803):CD Changer Motor Driver

1.Block Diagram

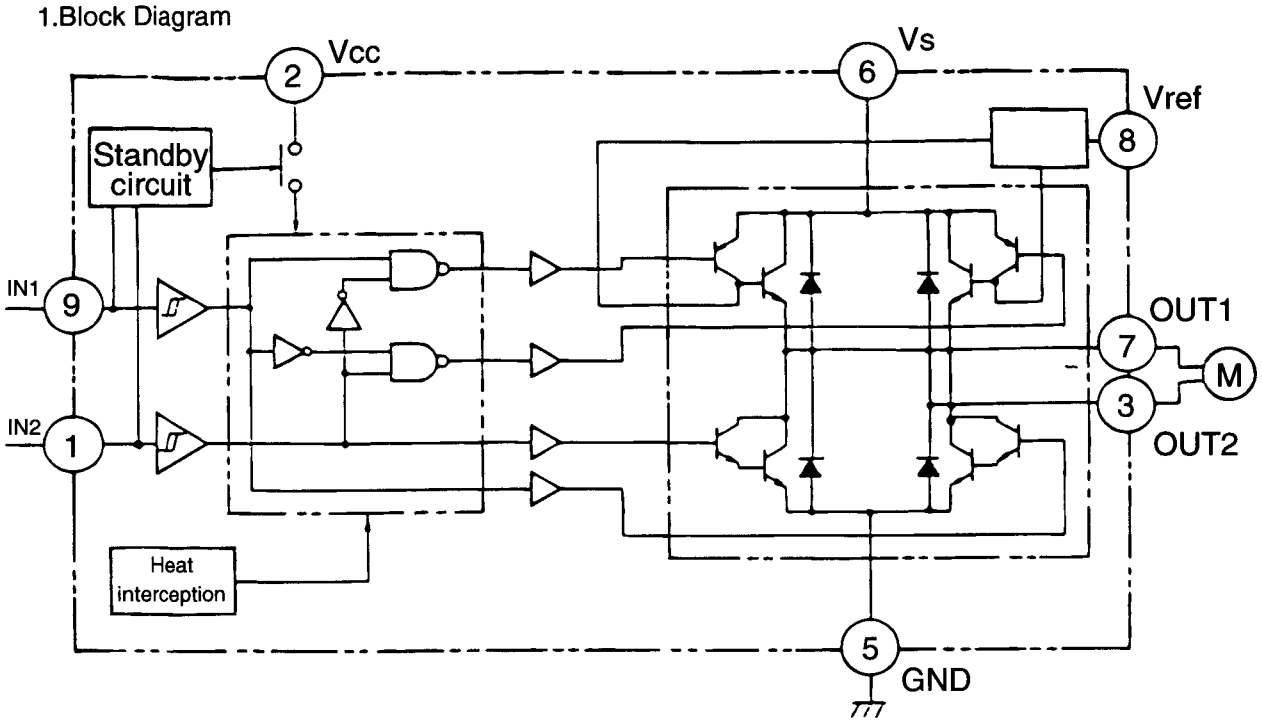

2.Function

INPUT		OUTPUT		MODE
IN1	IN2	OUT1	OUT2	MOTOR
0	0	∞	∞	STOP
1	0	H	L	CW/CCW
0	1	L	H	CCW/CW
1	1	L	L	BRAKE

■BU9253AS(IC851):Echo Mixing

1. Block Diagram

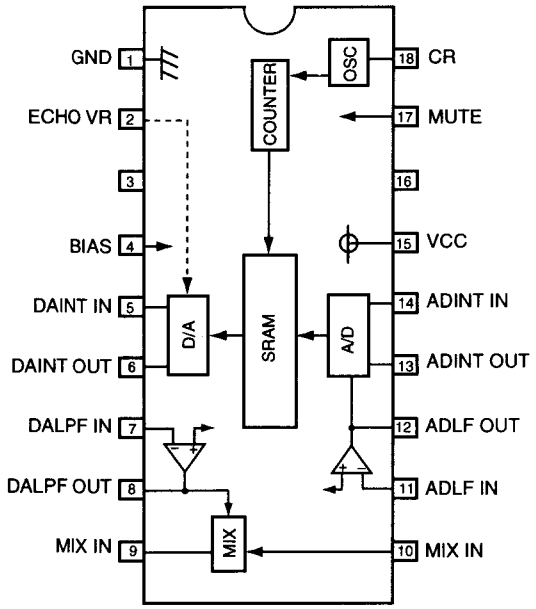

2. Pin Function

Pin No.	Symbol	I/O	Function
1	GND	-	Ground pin
2	ECHO VR Echo	I	Echo level control
3	NC1	-	Non connection
4	BIAS	-	Analog part DC bias
5	DAINT IN	I	DA side Integrator input
6	DAINT OUT	O	DA side integrator output
7	DALPF IN	I	DA side LPF input
8	DALPF OUT	O	DA side LPF output
9	MIX OUT	O	Mix AMP input pin for original tone
10	MIX IN	I	Mix AMP input pin for original tone
11	ADLPF IN	I	AD side LPF input
12	ADLPF OUT	O	AD side LPF output
13	ADINT OUT	O	AD side Integrator output
14	ADINT IN	I	AD side integrator input
15	VCC	-	VCC pin
16	NC2	-	Non connection
17	MUTE	I	Mute control
18	CR	-	CR pin for Oscillator

■TA2057N(IC1) FM/AM IF AMP & Detector

1.Block Diagrams

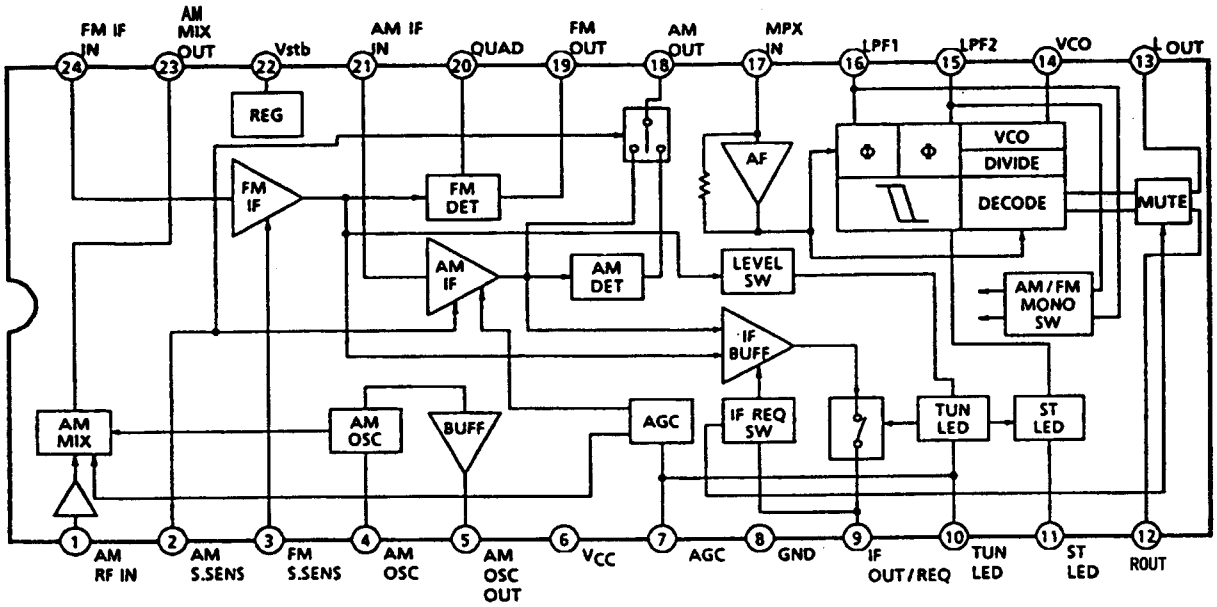

2.Pin Function

Pin No.	I/O	Symbol	Function	Pin No.	I/O	Symbol	Function
1	I	AM RF	AMRF signal input	13	O	Lch OUT	Output Lch
2		AM S.SENS		14	O	VCO	Voltage controlled terminal
3		FM S.SENS		15	O	LPF2	When voltage of terminal is MONO at "H" and ST at "L"
4	-	AM OSC	AM local oscillation circuit				
5	O	AM OSC OUT	AM local oscillation signal output	16	O	LPF1	When voltage of terminal is AM at "H" and FM at "L"
6	-	VCC	Power supply				
7	I	AGC	AGC voltage input terminal	17	I	MPX IN	Multi plex signal input
8	-	GND	Connect to GND	18	O	AM OUT	AM detection signal output
9	O	IF OUT	IF REQ signal output to IC2	19	O	FM OUT	FM detection signal output
10	O	TU IND	Indicator drive output when tuning	20	I	FM QUAD	Bypass to FMIF
11	O	ST IND	Stereo indicator output "H"mono . "L"stereo	21	I	AM IF IN	Input of AMIF signal
				22	-	Vst	Fixed voltage output terminal
12	O	Rch OUT	Output Rch	23	O	AM MIX OUT	Output terminal for AM mixer
				24	I	FM IF IN	Input of FMIF signal

■ LC72136N(IC2):PLL Frequency sinsesizer L S I

1. Layout

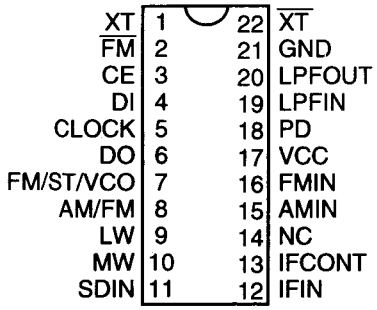

2. Block

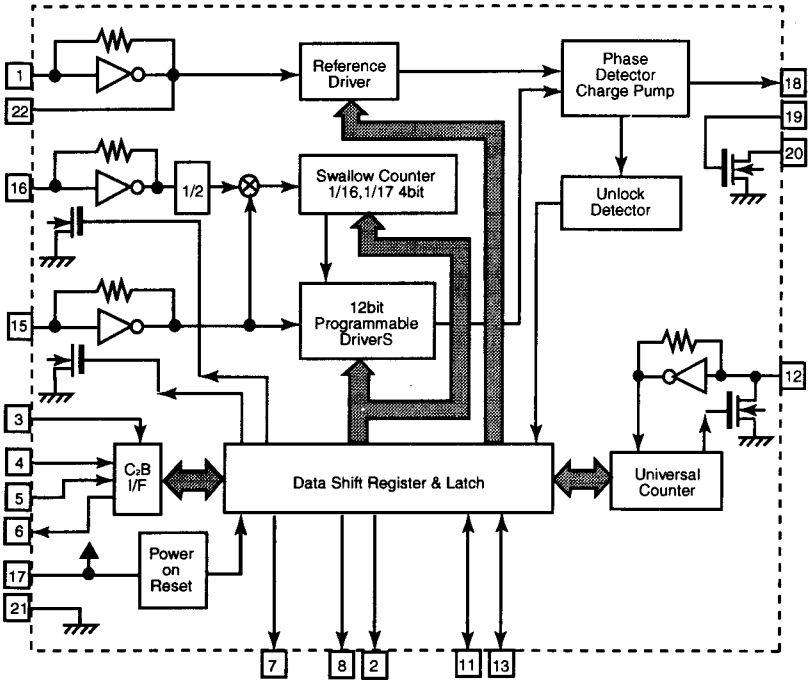

3. Function

Pin No.	Symbol	I/O	Function	Pin No.	Symbol	I/O	Function
1	XT	I	X'tal oscillator connect (75KHz)	12	IFIN	I	IF counter signal input
2	$\overline{FM}$	O	LOW:FM mode	13	IFCONT	O	IF signal output
3	CE	I	When data output/input for 4pin(input) and 6pin(output): H	14	NC	-	Not use
4	DI	I	Input for receive the sirisl data from controller	15	AMIN	I	AM Local OSC signal output
5	CLOCK	I	Sync signal input use	16	FMIN	I	FM Local OSC signal input
6	DO	O	Data output for Controller Output port	17	VCC	-	Power suplly(VDD=4.5~5.5V) When power ON:Reset circuit move
7	FM/ST/VCO	O	"Low": MW mode	18	PD	O	PLL charge pump output(H: Local OSC frequency Height than Reference frequency. L: Low Agreement: Height impedance)
8	$\overline{AM}$/FM	O	Not use	19	LPFIN	I	Input for active lowpassfilter of PLL
9	LW	-	Not use	20	LPFOUT	O	Output for active lowpassfilter of PLL
10	MW	-	Not use	21	GND	-	Connected to GND
11	SDIN	I/O	Data input/output	22	$\overline{XT}$	I	X'tal oscillator(75KHz)

■BU1923F(IC4):RDS Detector (Only CA-D352TR)

1.Terminal Layout

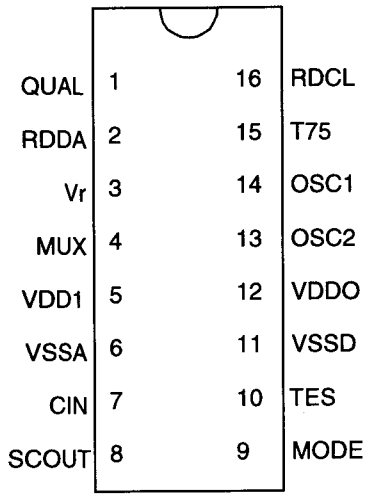

2.Pin Functiont

Pin No.	Symbol	I/O	Function
1	QUAL	--	Non connection
2	RDDA	O	RDS data output
3	Vr	O	Reference voltage output
4	MUX	I	Multiplex signal input
5	VDD1	--	+5Vsupply voltage for analog
6	VSSA	--	Ground for analog part(0V)
7	CIN	I	Subcarrier outputof reconstruction filter
8	SCOUT	O	Ground for digital part(0V)
9	MODE	--	Ground for digital part(0V)
10	TES	--	Ground for digital part(0V)
11	VSSD	--	Ground for digital part(0V)
12	VDDO	--	+5Vsupply voltage for digital part
13	OSC2	I	Oscilator input
14	OSC1	O	Oscilator OUTput
15	T57	--	Non connection
16	RDCL	O	RDS clock output

3.Block Diagram

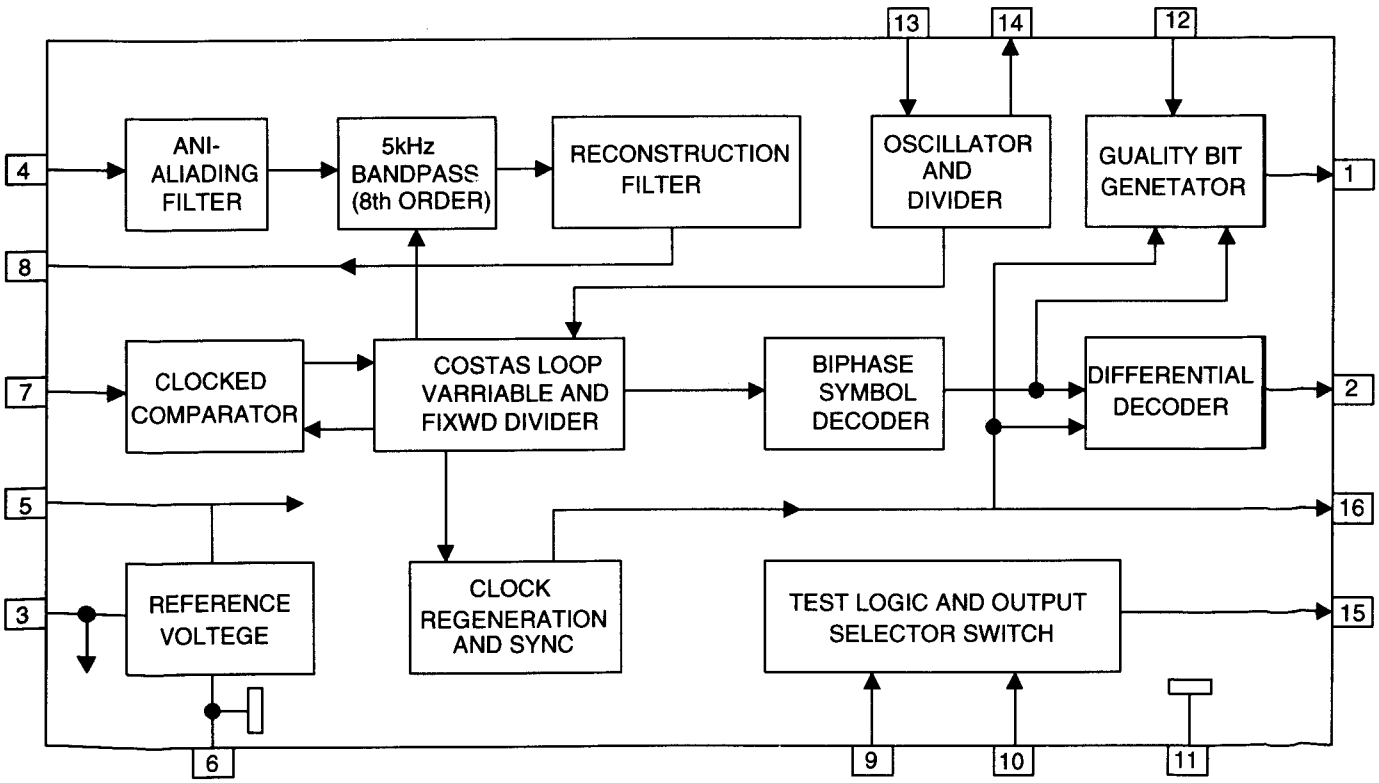

■BA3837(IC305):Vocal cancel (Only U,A type)

1.Block Diagram

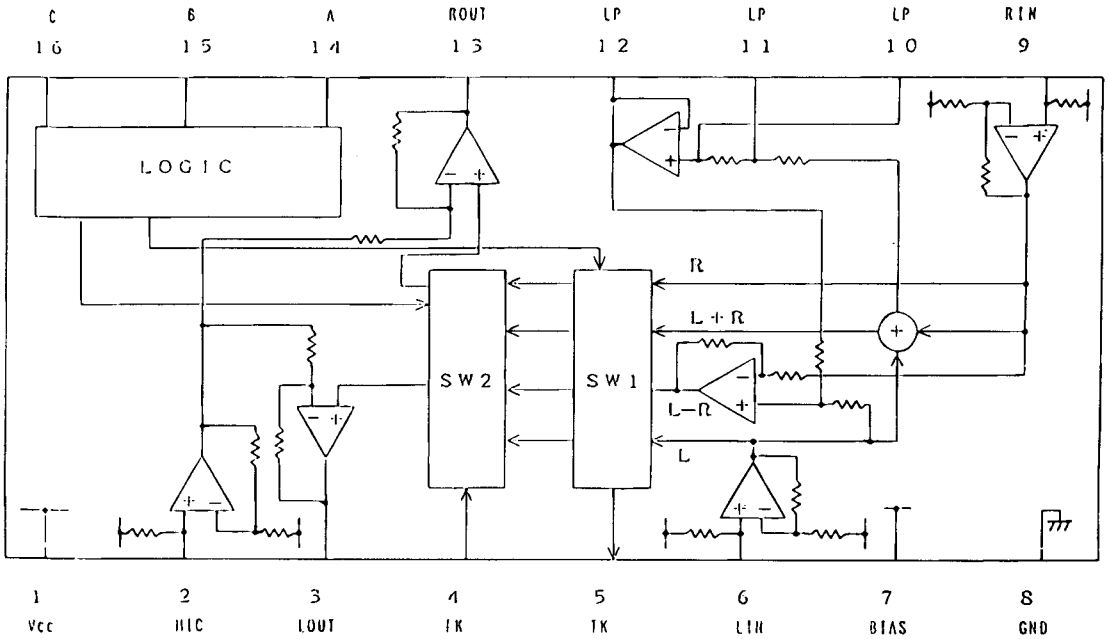

2.Pin Function

Pin No.	Symbol	I/O	Function
1	Vcc	-	Power supply
2	MIC IN	I	Microphone mixing input
3	LOUT	O	Channel L output
4	FK	I	Accepts signal from the key controller
5	TK	O	Outputs signal to the key controller
6	LIN	I	Channel L input
7	BIAS	I	Signal bias
8	GND	-	Connect to GND
9	RIN	I	Channel R input
10	LPF1	O	Connects to LPF time constant element
11	LPF2	O	Connects to LPF time constant element
12	LPF3	O	LPF output
13	ROUT	O	Channel R output
14	CONTA	I	Mode select input A
15	CONTB	I	Mode select input B
16	CONTC	I	Mode select input C

■ BA6897FPW(IC602) 4channel driver

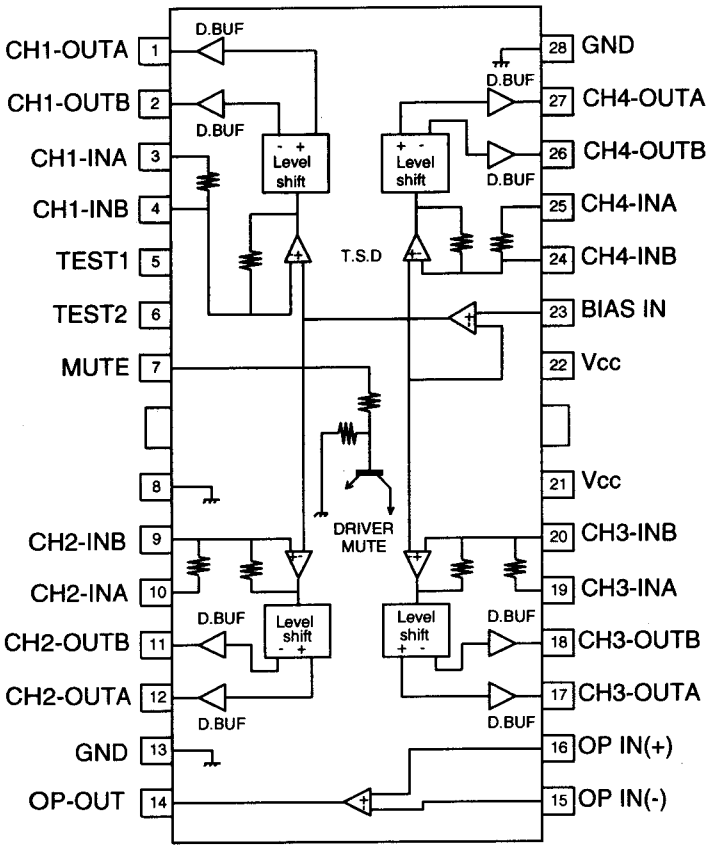

■ GP1U261X(IC404) : Receiver for remote controller

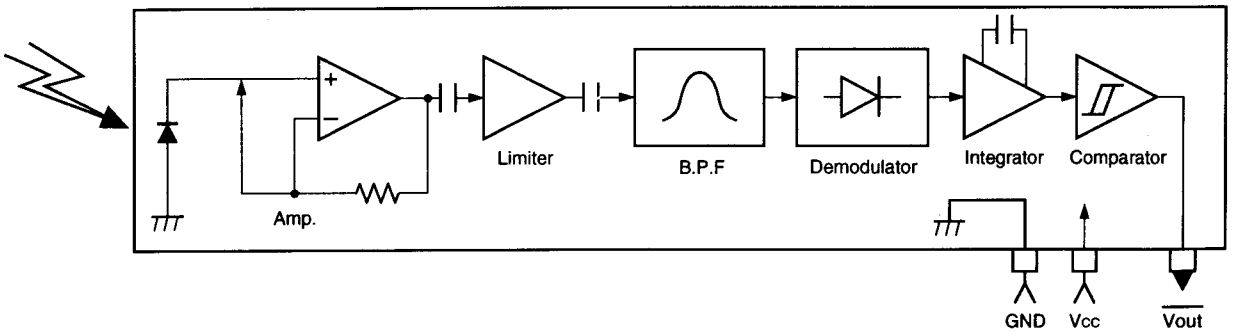

Internal Connections for FL Display Tube

Grid Assignment

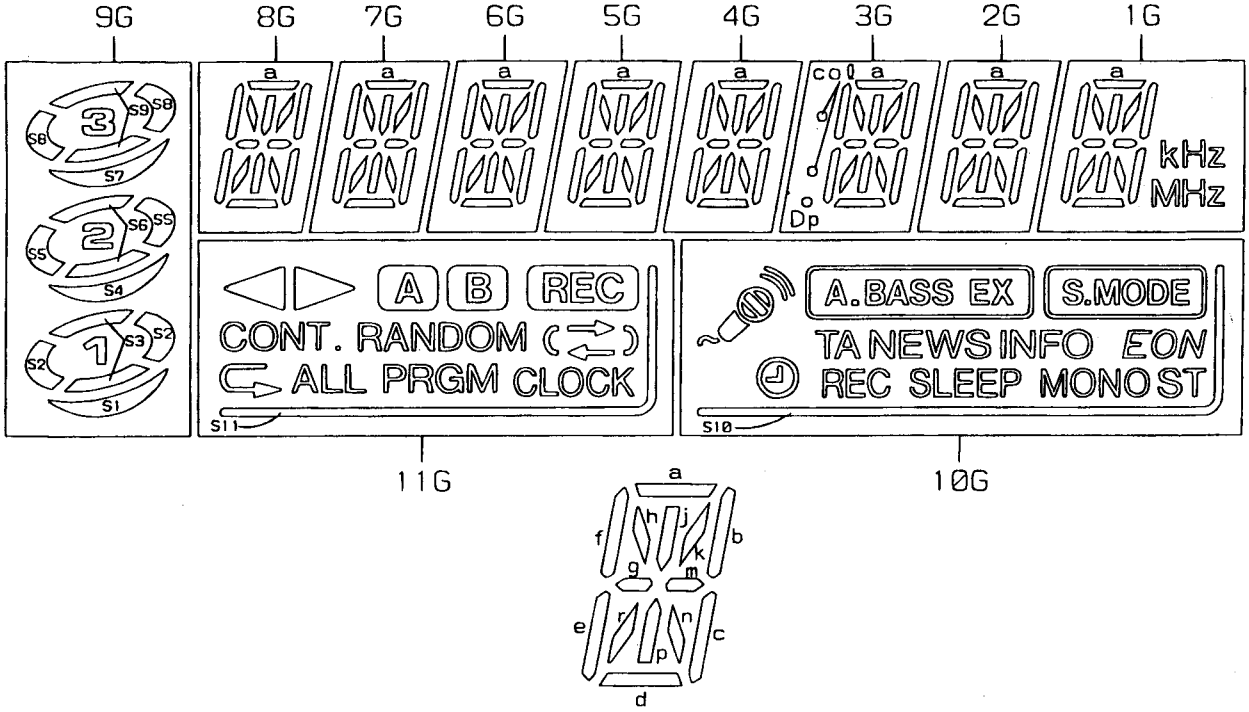

ANODE CONNECTION

	11G	10G	9G	8G	7G	6G	5G	4G	3G	2G	1G
P1	◁		1	d	d	d	d	d	d	d	d
P2	▷		S1	n	n	n	n	n	n	n	n
P3	A	(A.BASS.EX)	S2	p	p	p	p	p	p	p	p
P4	B	A.BASS EX	S3	r	r	r	r	r	r	r	r
P5	REC	(S.MODE)	2	e	e	e	e	e	e	e	e
P6	CONT.	S.MODE	S4	c	c	c	c	c	c	c	c
P7	RANDOM		S5	g	g	g	g	g	g	g	g
P8	(	TA	S6	m	m	m	m	m	m	m	m
P9	⇄	NEWS	3	f	f	f	f	f	f	f	f
P10	)	INFO	S7	b	b	b	b	b	b	b	b
P11	⊂	EON	S8	k	k	k	k	k	k	k	k
P12	ALL	REC	S9	j	j	j	j	j	j	j	j
P13	PRGM	SLEEP	-	h	h	h	h	h	h	h	h
P14	CLOCK	MONO	-	a	a	a	a	a	a	a	a
P15	S11	ST	-	-	-	-	-	-	col	-	kHz
P16	-	S10	-	-	-	-	-	-	Dp	-	MHz

Removal of Main Parts

■Removal of the Metal Cover

1.Remove the six screws A fastening the metal cover to the rear panel of the main unit.
2.Remove the two screws B fastening the metal cover to the side panel of the main unit.
3.Spread both sides of the metal cover outward and remove from the back panel by lifting upward.

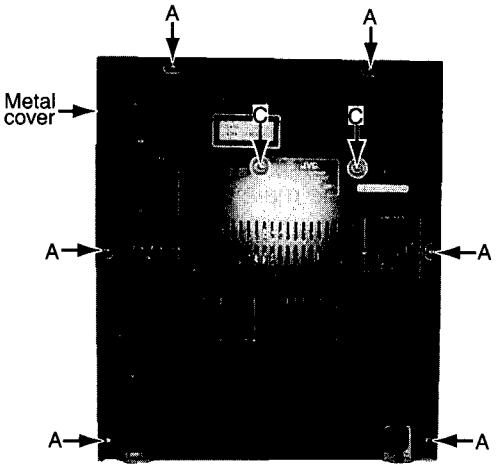

Fig 1

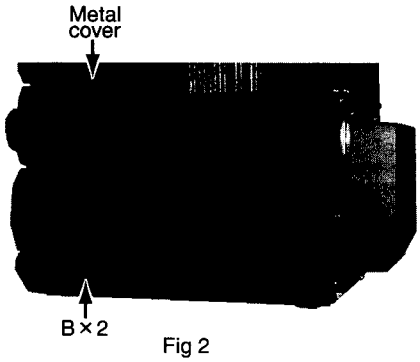

Fig 2

■Removal of the CD Changer Mechanism Assembly

1.Remove the metal cover
2.Remove the two screws C fastening the CD changer mechanism assembly to the rear panel of the main unit.
3.Remove the two screws D fastening the CD changer mechanism assembly to the top panel of the main unit.
4.Disconnect the card wires connected to the CD changer mechanism assembly from connectors CN304,CN305 and CN306 on the main amplifier board on the right side of the main unit.
5.Expand a rear panel outside,back of CD changer mechanism is lifted and detached.

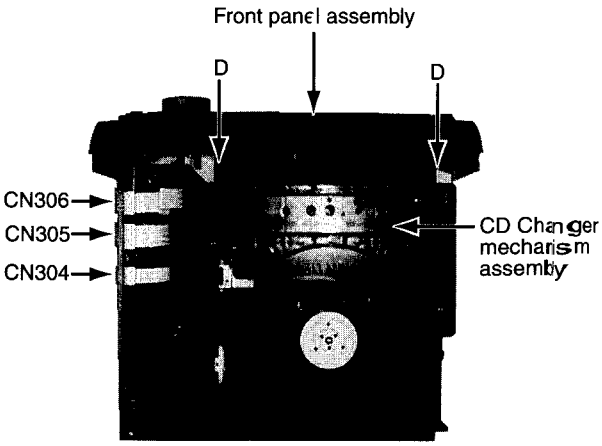

Fig 3

■Removal of the Front Panel Assembly

1. Remove the metal cover.
2. Remove the CD changer mechanism assembly.
3. Remove the four screws E fastening the front panel assembly to the side of the main unit.
4. Use a screwdriver,etc..,to disengage clips ⓐ and ⓑ from the side panels of the main unit.
5. Disconnect the card wires connected to the front panel assembly from connectors CN302.CN303.CN316 on the main amplifier board.
6. Remove the tie band holding the parallel wires protruding from the front panel assembly and the parallel wires protruding from the power supply board.
7. Disconnect connector CN904 on the power amplifier board.
8. Dinconnect connector CN310 on the Main P.C.Board (Only U,A type)
9. Remoe the plastic rivet ⓒ fastening the main P.C.Board and front panel assembly.
10. Remove the front panel assembly.

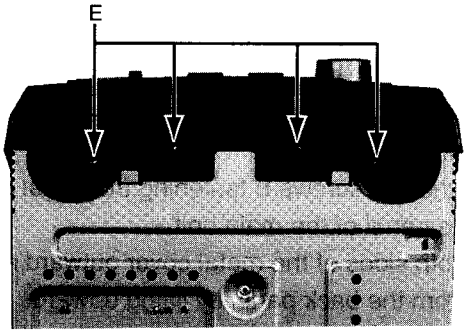

Fig 4

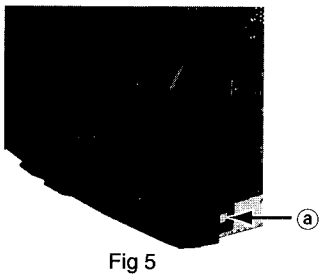

Fig 5

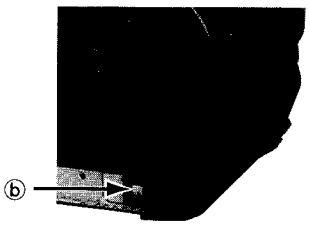

Fig 6

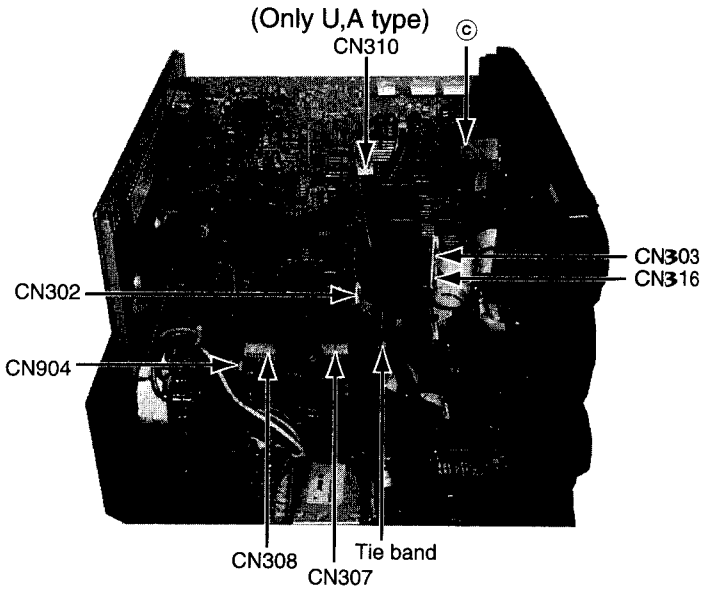

Fig 7

■Removal of the Rear Panel Assembly

1.Removal the metal cover.
2.Remove the CD traverse mechanism assembly.
3.Remove the front panel assembly.
4.Remove the screw F fastening the main amplifier board and bottom chassis to the side panels of the main unit.
5.Remove the screw G fastening the rear panel and bottom chassis to the rear panel of the main unit.
6.Use a screwdriver,etc.,to disengage the two engagements bottom chassis clips ⓓ and ⓔ from the bottom part of the side panels of the rear panel assembly.
7.Disconnect the parallel wires protruding from the power supply board from connector CN902 of the power amplifier board.(See Fig 13)
8.Remove the two screws H fastening the voltage selector of the rear panel. (Only U,A type)(See Fig 10)

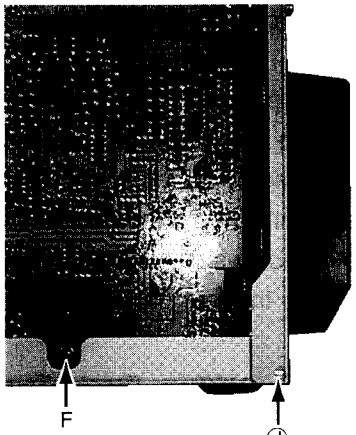

Fig 8

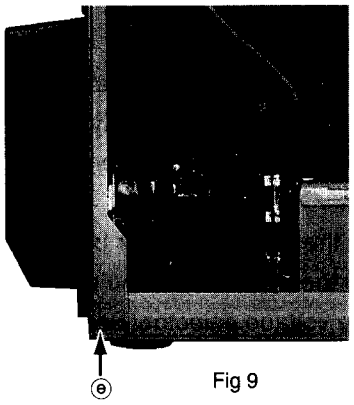

Fig 9

■Removal of the Main Amplifier Board

1.Remove the rear panel assembly
2.Remove the four screws I fastening the main amplifier board to the rear panel.
3.Disconnect the main amplifier board connectors CN307 and CN308 from the power amplifier board.(See Fig 13)

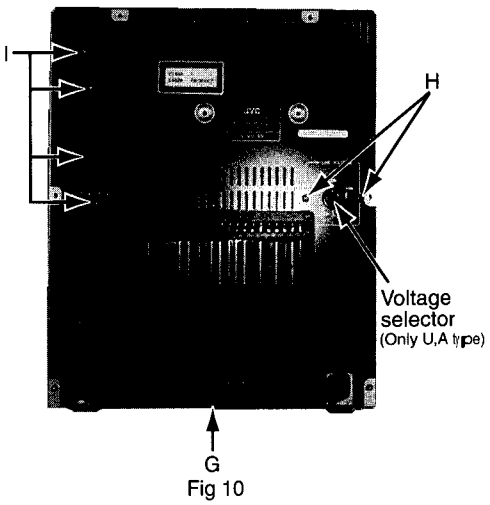

Fig 10

■Removal of the Power Amplifier Board

1.Remove the rear panel assembly.
2.Remove the main amplifier board.
3.Remove the two screws J fastening the rear cover to the rear panel assembly and then remove the rear cover.
4.Remove the six screws (K×2,L×4) fastening the power amplifier board to the rear panel assembly.

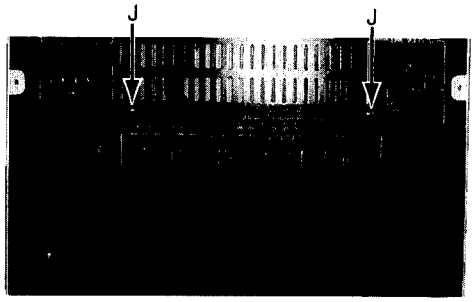

Fig 11

■Remove of the Power Transformer

1.Remove the metal cover.
2.Remove the CD traverse mechanism assembly.
3.Remove the rear panel assembly.
4.Remove the four screws M fastening the power transformer.
5.Disconnect the power amplifier board connector CN902 and then disconnect the parallel wire.
6.Remove the voltage selector.(See Fig 10)

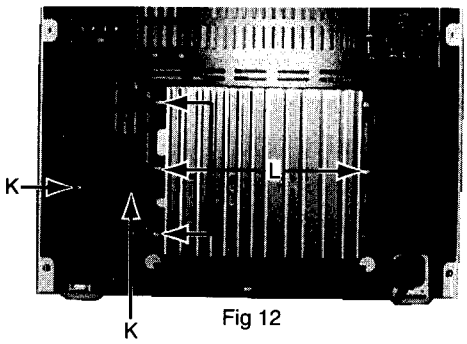

Fig 12

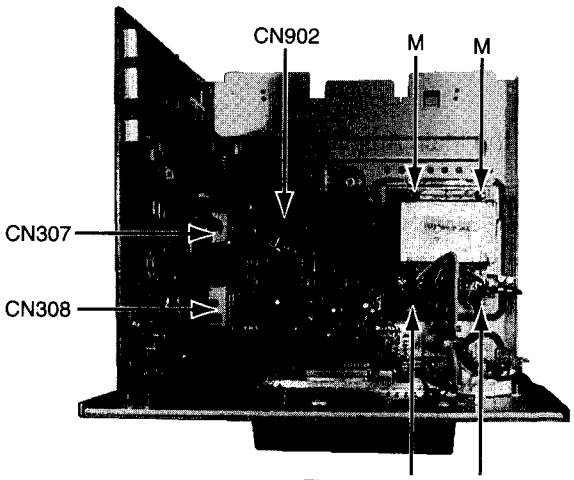

Fig 13

■Removal of the Front Panel

1.Remove the metal cover.
2.Remove the CD traverse mechanism assembly.
3.Remove the front panel assembly.
4.Remove the volume knob and nut from the front panel assembly.
5.Remove the six screws N fastening the stay bracket inside the front panel assembly.
6.Remove the eleven screws O fastening the system CPU board.
7.Disconnect the card wires protruding from connector CN700 on the system CPU board.

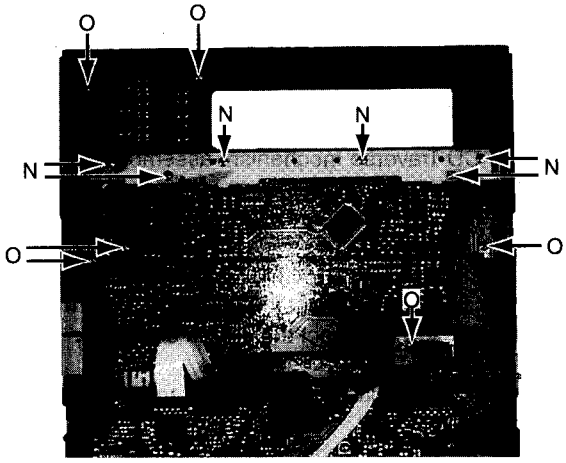

Fig 14

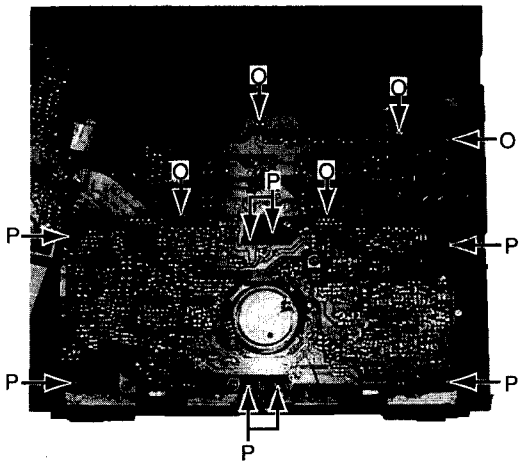

Fig 15

■Removal the of the Cassette Mechanism Assembly.

1.Remove the metal cover.
2.Remove the CD traverse mechanism assembly.
3.Remove the front panel assembly.
4.Remove the eight screws P fastening the cassette mechanism assembly to the inside of the front panel assembly.
5.DIsconnect the card wires from connectors CN305 and CN306 on the head amplifier & mechanism control board.

≪CD Traverse Mechanism Type:C3CN Section≫

■Removing the CD Servo control board (See Fig.1)

1. Remove the Metal cover.
2. Remove the CD Traverse mechanism assembly.
3. From bottom side the CD Traverse mechanism assembly, remove the one screw 1 retaining the CD Servo control board.
4. From the connectors CN601, CN603, CN604 on the CD Servo control board, diconnect the card wire, from the connector CN602, disconnect the six pin connector wire.
5. Disengage the two engagements "A", remove the CD Servo control board.

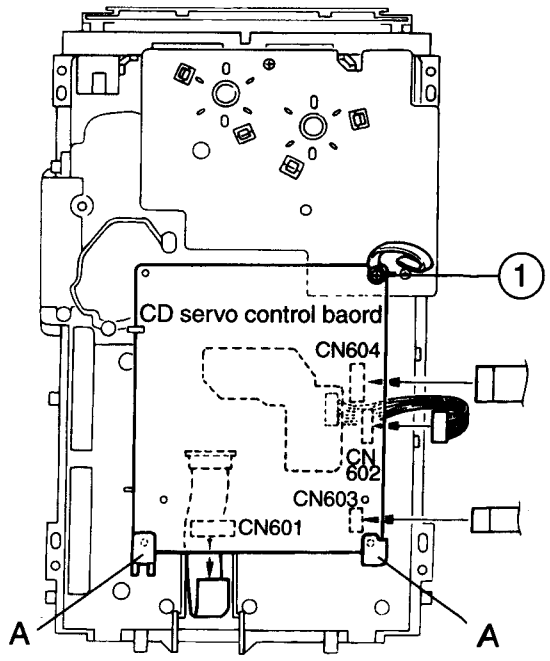

Fig.1

■Removing the CD tray assembly (See Fig.2~4)

1. Remove the front panel assembly.
2. Remove the CD Traverse mechanism assembly.
3. Remove the CD Servo control board.
4. From the T.bracket section "B" and clamper base section "C", remove both of the edges fixing the rod(See Fig.2 and 3).
5. Remove the screw 2 retaining the Disc stopper (See Fig.3).
6. Remove the three screws 3 retaining the T.bracket (See Fig.3).
7. Remove the screws 4 retaining the clamper assembly (See Fig.3).
8. From the left side face of the chassis assembly, remove the one screw 5 retaining both of the return spring and lock lever(See Fig. 4).
9. By removing the pawl at the section "D" fixing the return spring, dismount the return spring(See Fig.4).
10. Remove the three lock levers(See Fig.4).

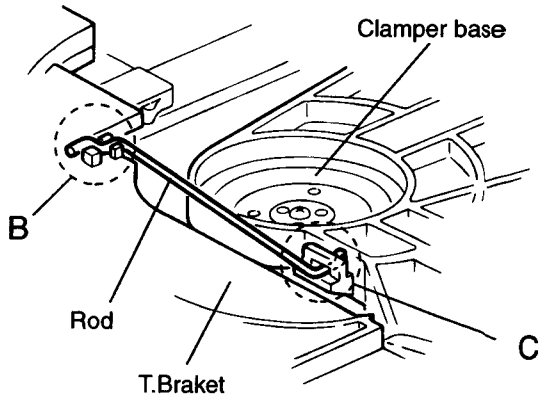

Fig.2

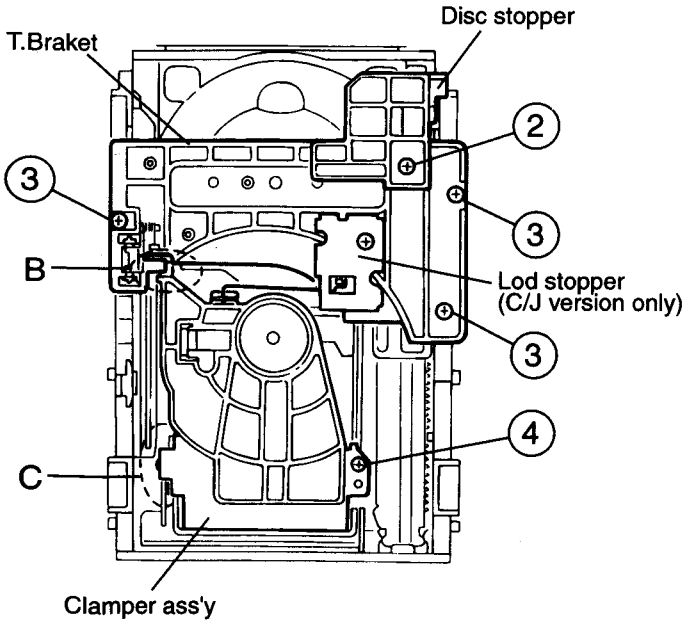

Fig.3

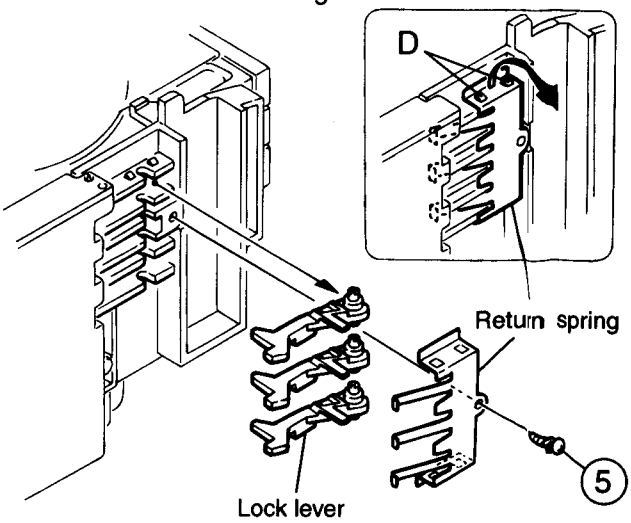

Fig.4

11. Check whether the lifter unit stopper has been caught into the hole at the section "E" of CD tray assembly as shown in Fig.5.
12. Make sure that the driver unit elevator is positioned as shown in Fig.6 from to the second or fifth hole on the left side face of the CD Traverse mechanism assembly.

[Caution] In case the driver unit elevator is not at above position, set the elevator to the position as shown in Fig.7 by manually turning the pulley gear as shown in Fig.8.

13. Manually turn the motor pulley in the clockwise direction until the lifter unit stopper is lowered from the section "E" of CD tray assembly(See Fig.8).
14. Pull out all of the three stages of CD tray assembly in the arrow direction "F" until these stages stop (See Fig.6).
15. At the position where the CD tray assembly has stoppend, pull out the CD tray assembly while pressing the two pawls "G and G" on the back side of CD tray assembly(See Fig.9). In this case, it is easy to pull out the assembly when it is pulled out first from the stage CD tray assembly.

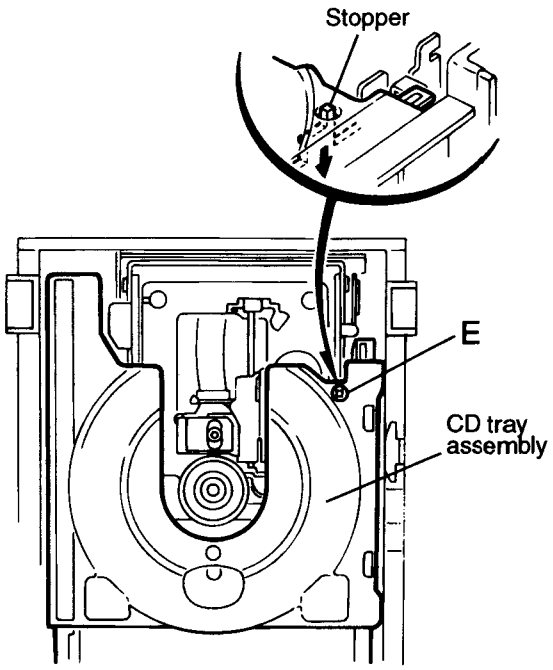

Fig.5

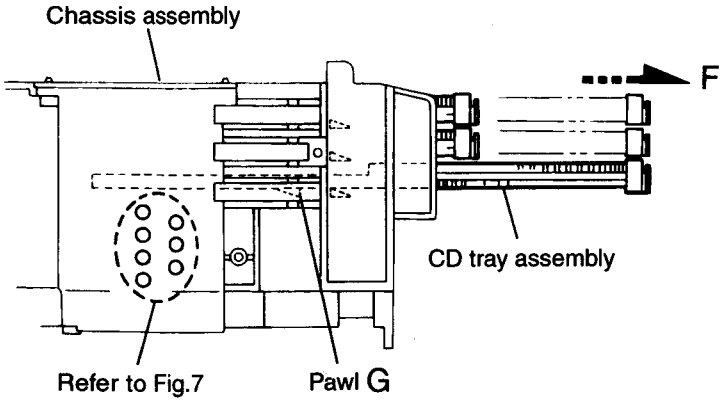

Fig.6

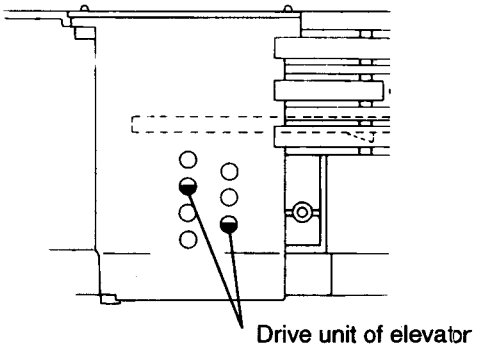

Fig.7

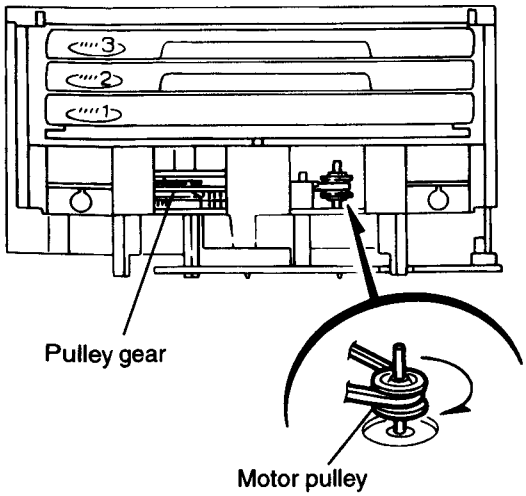

Fig.8

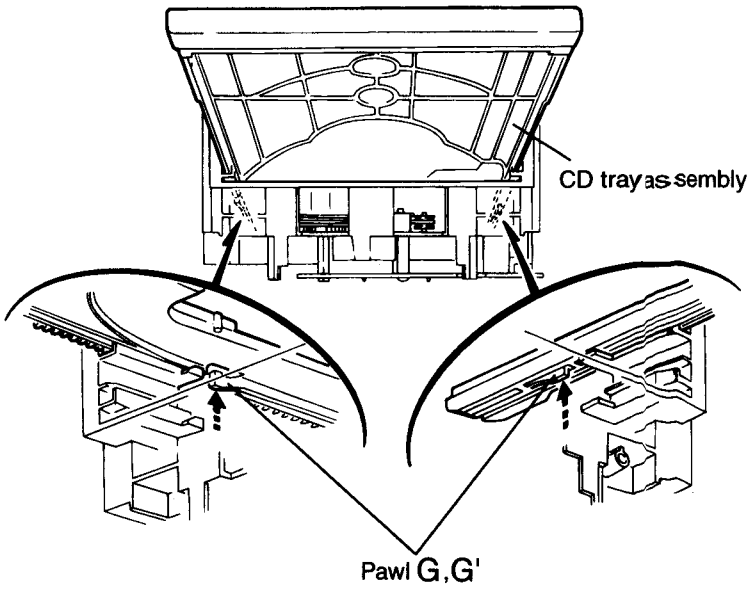

Fig.9

■Removing the CD mechanism assembly(See Fig.10)

1. While turning the cams R1 and R2 assembly in the arrow direction "H" , align the shaft "I" of the CD mechanism assembly to the position shown in Fig.10.
2. Remove the four screw 6 retaining the CD mechanism assembly.

■Removing the CD mechanism (See Fig.11 and 12)

1. For dismounting only the CD machanism without removing the CD mechanism assembly, align the shaft "J" of the CD mechanism assembly to the position shown Fig.11 while turning the cam R1 and R2 assembly in the arrow direction "K" .
2. By raising the CD mechanism assembly in the arrow direction "L" , remove the assembly from the lifter unit (See Fig.12).

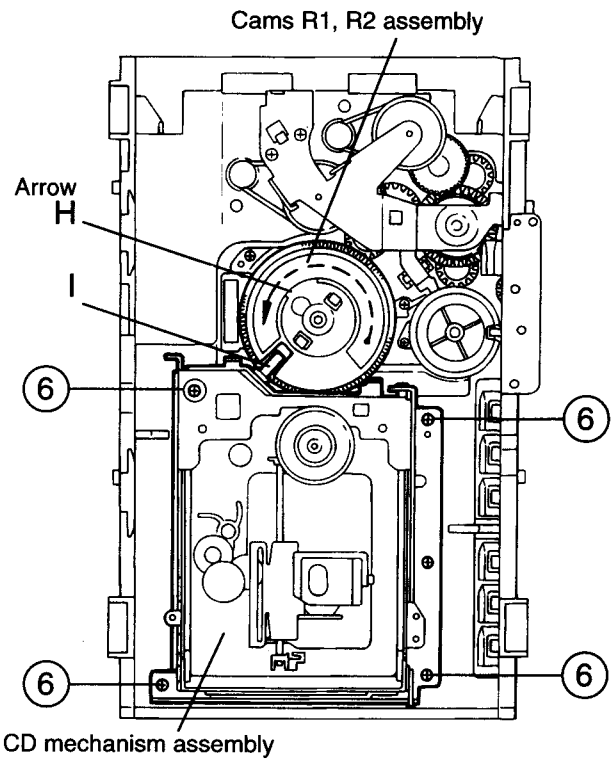

Fig.10

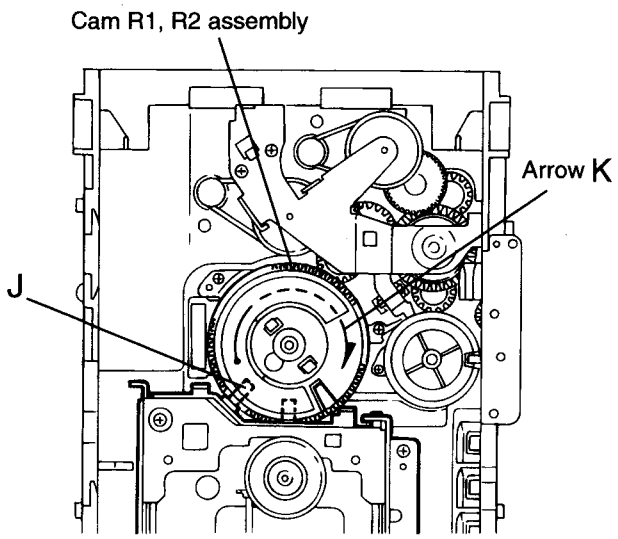

Fig.11

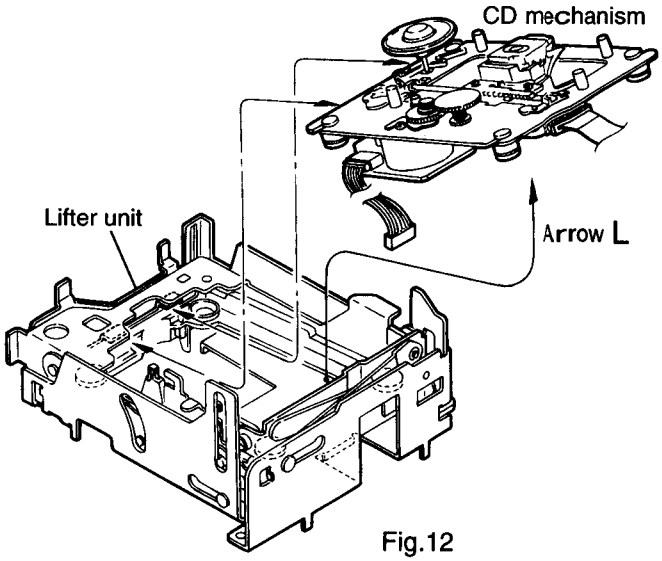

Fig.12

■Removing the CD pick unit (See Fig.13)

1. Move the cam gear in the arrow direction a . Then, the CD pickup unit will be moved in the arrow direction b .
2. According to the above step, shift the CD pickup unit to the center positior.
3. While pressing the stopper retaining the shaft in the arrow direction c , pull out the shaft in the arrow direction d .
4. After dismounting the shaft from the CD pickup unit, remove the CD pickup unit

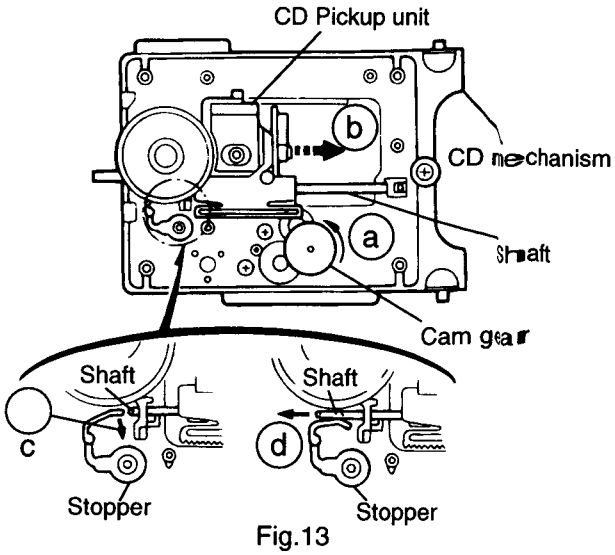

Fig.13

■Removing the actuator motor boad (See Fig.14, 15)

1. Absord the four soldered positions "M" of the right and left motors with a soldering absorber(See Fig.14).
2. Remove the two screws 7 retaining the actuator motor board(See Fig.14).
3. Remove the two screws 8 retaining the tray select switch board(See Fig.15).

■Removing the can unit (See Fig.15 ~18)

1. Remove the CD mechanism assembly.
2. While turning the cam gear L, align the pawl "N" position of the drive unit to the notch position(Fig.15) on the cam gear L.
3. Pull out the drive unit and cylinder gear(See Fig.17).
4. While turning the cam gear L, align the pawl "O" position of the select lever to the notch position(Fig.18) on the cam gear L.
5. Remove the four screws 9 retaining the cam unit(cam gear L and cams R1/R2 assembly)(See Fig.18).

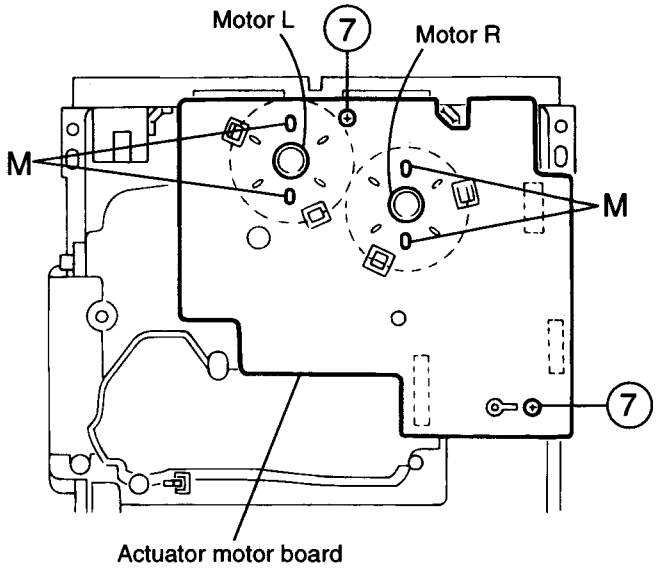

Fig.14

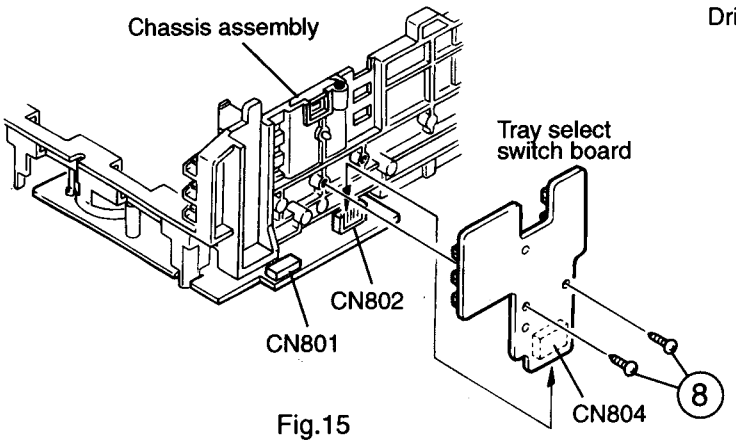

Fig.15

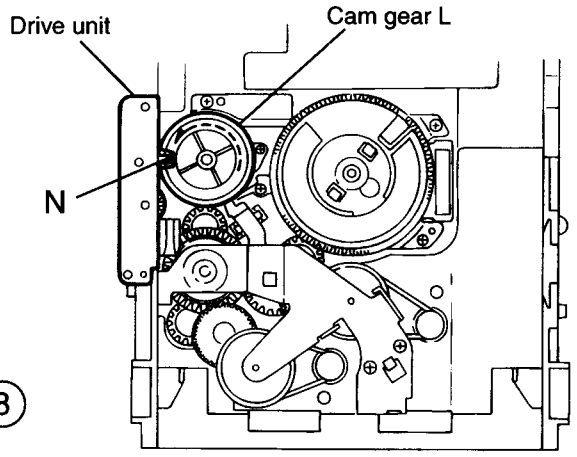

Fig.16

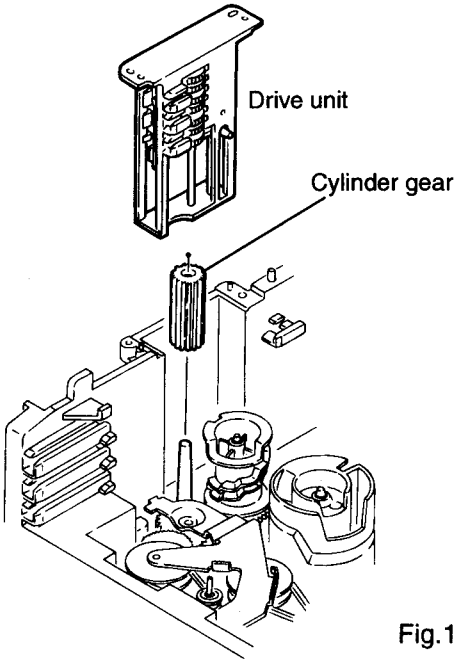

Fig.17

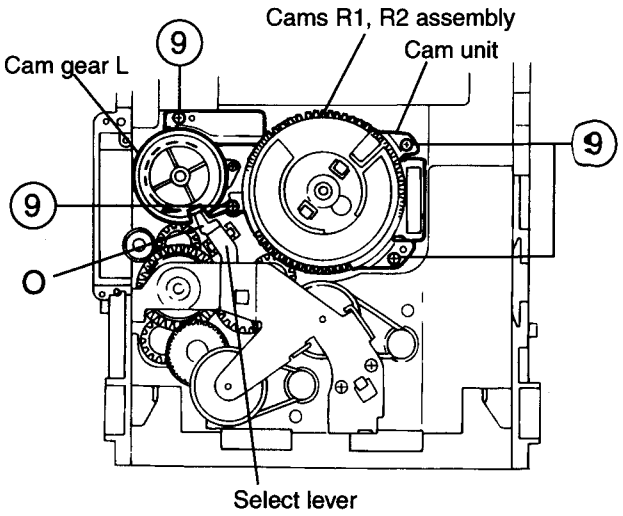

Fig.18

■Removing the actuator motor and belt (See Fig.19~22)

1. Remove the two screws 10 retaining the gear bracket (See Fig.19).
2. While pressing the pawl "P" fixing the gear bracket in the arrow direction, remove the gear bracket (See Fig.19).
3. From the notch "Q section" on the chassis assembly fixing the edge of gear bracket, remove and take out the gear bracket(See Fig. 20).
4. Remove the belts respectively from the right and left actuator motor pulleys and pulley gears(See Fig. 19).
5. After turning over the chassis assembly, remove the actuator motor while spreading the four pawls "R" fixing the right and left actuator motors in the arrow direction(See Fig. 21).

[Note] When the chassis assembly is turned over under the conditions wherein the gear bracket and belt have been removed, then the pulley gear as well as the gear, etc. constituting the gear unit can possibly be separated to pieces. In such a case, assemble these parts by referring to the assembly and configuration diagram in Fig. 22.

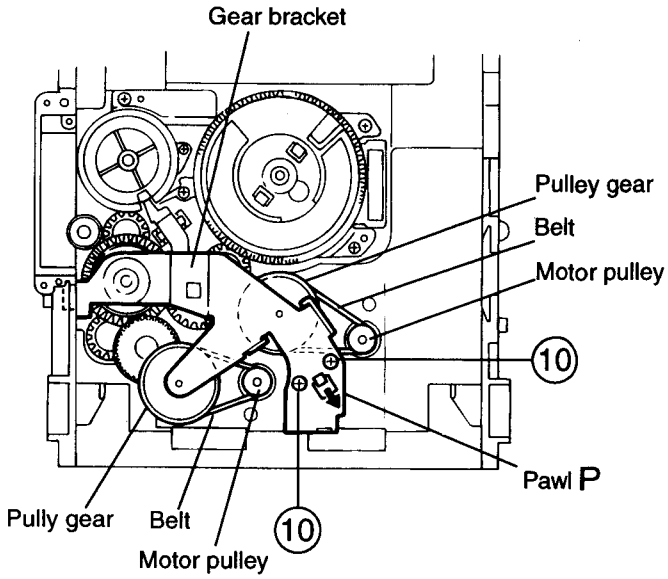

Fig.19

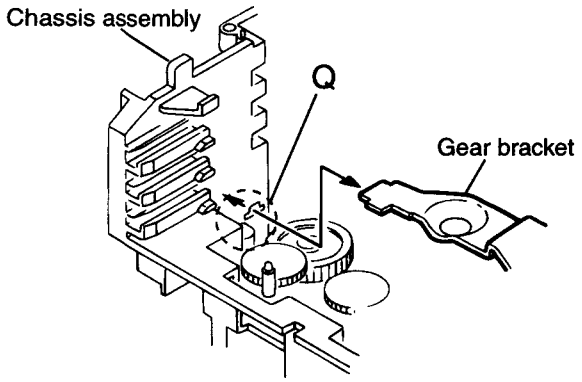

Fig.20

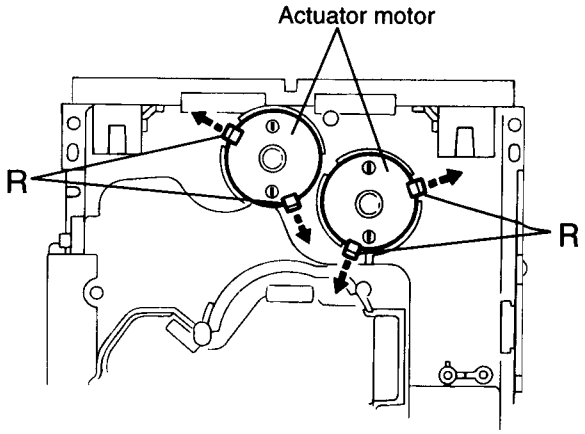

Fig.21

Assembly and Configuration Diagram

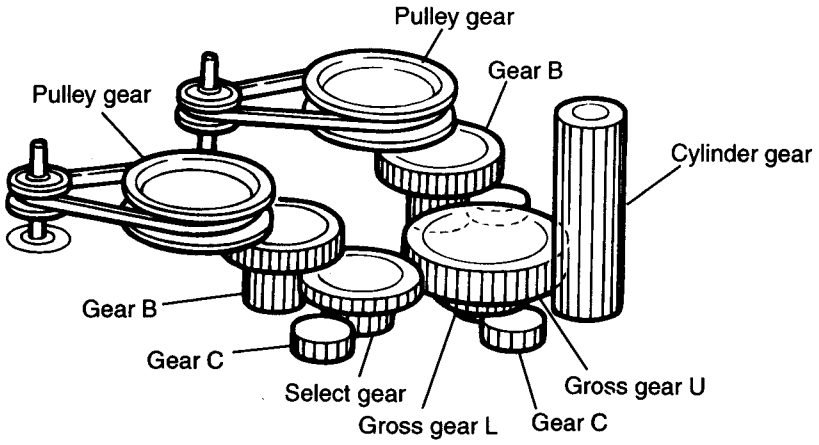

Fig.22

■Removing the cams R1/R2 assembly and cam gear L(See Fig.23)

1. Remove the slit washer fixing the cams R1 and R2 assembly.
2. By removing the two pawls "S" fixing the cam R1, separate R2 from R1.
3. Remove the slit washer fixing the cam gear L.
4. Pull out the cam gear L from the C.G. base assembly.

■Removing the C.G. base assembly (See Fig.23 and 24)

Remove the three screws 11 retaining the C.G. base assembly.

[Caution] To retassemble the cylinder gear, etc.with the cam unit (cam gear and cans R1/R2 assembly), gear unit and drive unit, align the position of the pawl "N" on the drive unit to that o f the notch on the cam gear L. Then, make sure that the gear unit is engaged by turning the cam gear L (See Fig. 24).

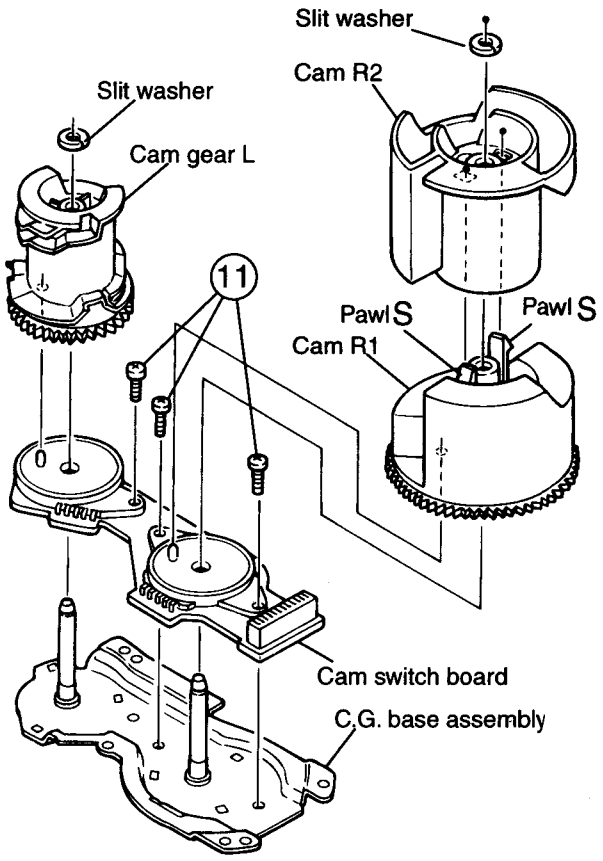

Fig.23

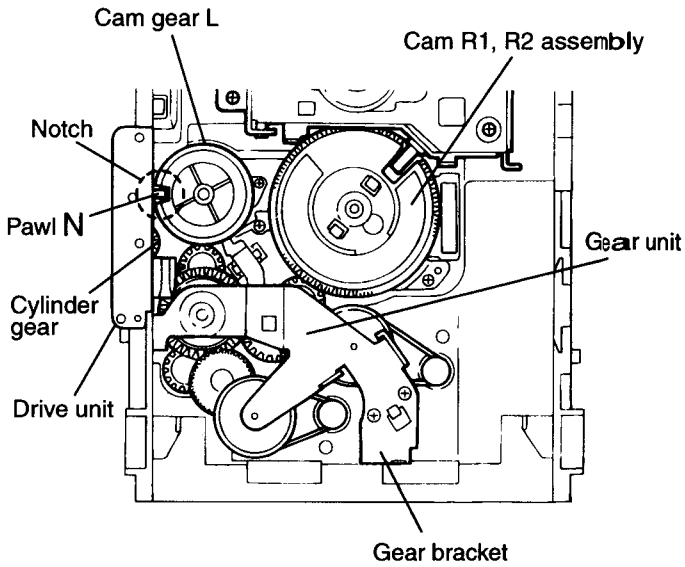

Fig.24

《Cassette Mechanism Section》

■ Removing the Playback, Recording and Eraser Heads

1. While shifting the trigger arms seen on the right side of the head mount in the arrow direction, turn the flywheel R in counterclockwise direction until the head mount has gone out with a click (See Fig. 5-24).
2. When the flywheel R is rotated in counterclockwise direction, the playback head will be turned in counterclockwise direction from the position in Fig. 5-25 to that in Fig. 5-26.
3. At this position, disconnect the flexible P.C. board (outgoing from the playback head) from the connector CN301 on the head amp. & mechanism control P.C. board.
4. After dismounting the FPC holder, remove the flexible P.C. board.
5. Remove the flexible P.C. board from the chassis base.
6. Remove the spring ⓐ from behind the playback head.
7. Loosen the reversing azimuth screw retaining the playback head.
8. Take out the playback head from the front of the head mount.
9. The recording and eraser heads should also be removed similarly according to Steps 1~8 above.

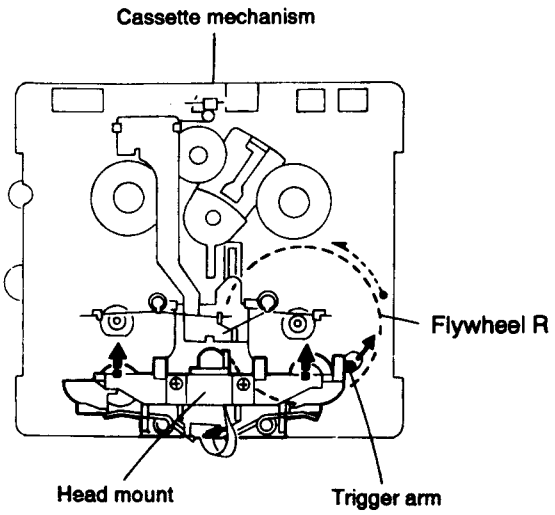

Fig.5-24 (Mechanism A side)

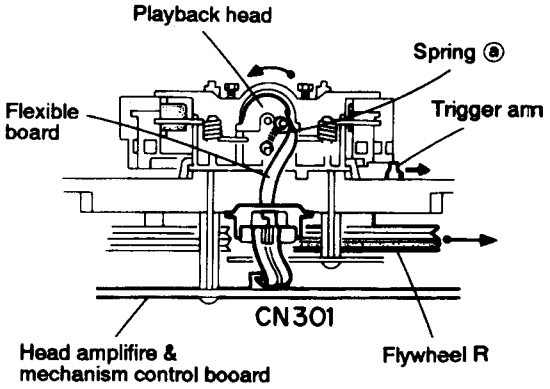

Fig.5-25 (Mechanism A side)

● Reassembling the Playback, Recording and Eraser Heads

1. Reassemble the playback head from the front of the head mount to the position as shown in Fig. 5-26.
2. Fix the reversing azimuth screw.
3. Set the spring ⓐ from behind the playback head.
4. Attach the flexible P.C. board to the chassis base, and fix it with the FPC holder as shown in Fig. 5-26.
5. The recording and eraser heads should also be reassembled similarly according to Steps 1~4 above.

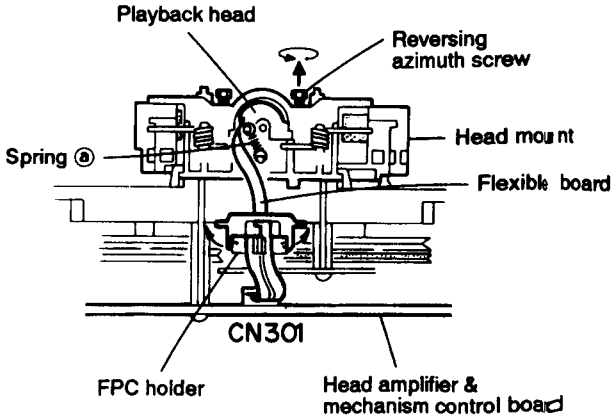

Fig.5-26 (Mechanism B side)

■ Removing the Head Amp. & Mechanism Control P.C. Board (See Fig. 5-27)

1. Remove the cassette mechanism assembly.
2. After turning over the cassette mechanism assembly, remove the five screws ① retaining the head amp. & mechanism control P.C. board.
3. Disconnect the connectors CN303 and CN304 on the P.C. board and the connectors CN1 on both the right and left side reel pulse P.C. boards.
4. When necessary, remove the 4pin parallel wire soldered to the main motor.

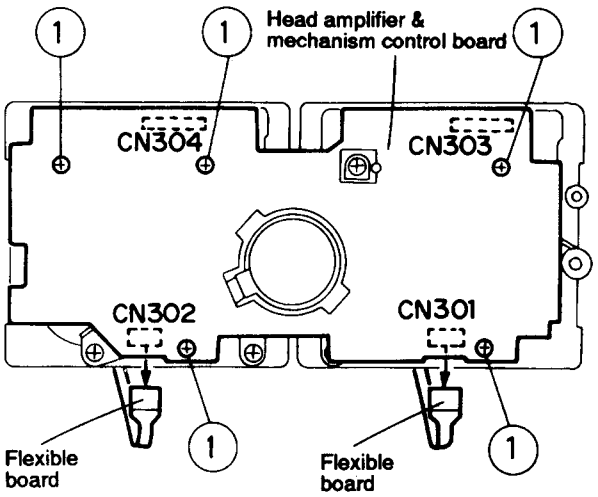

Fig.5-27

■ Removing the Capstan Motor Assembly

1. Remove the six screws ② retaining the capstan motor assembly (See Fig. 5-28).
2. While raising the capstan motor, remove the capstan belts A and B respectively from the motor pulley (See Figs. 5-28,5-29)

   Caution 1: Be sure to handle the capstan belts so carefully that these belts will not be stained by grease and other foreign matter. Moreover, these belts should be hanged while referring to the capstan belt hanging method in Fig. 5-29,5-30.

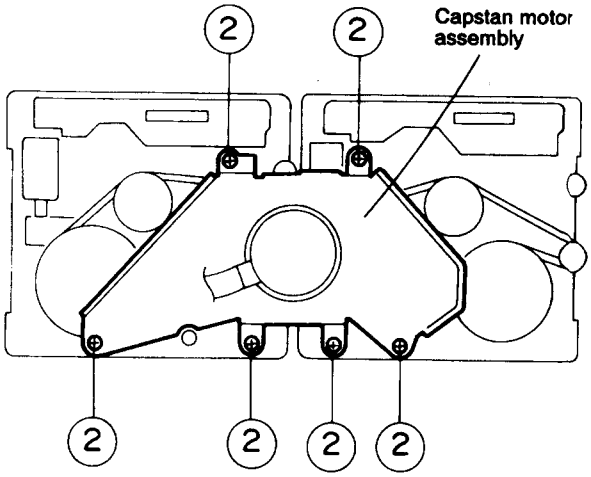

Fig.5-28

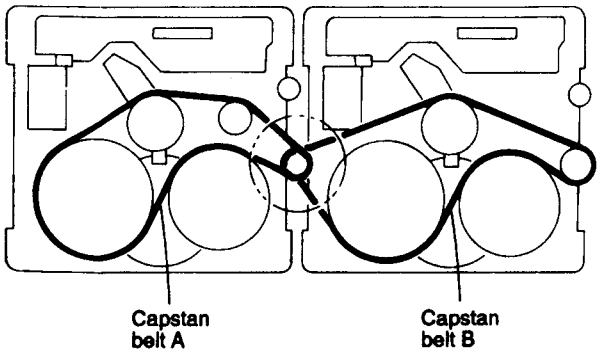

Fig.5-29

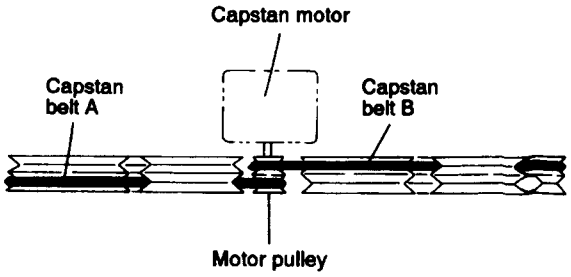

Fig.5-30

■ Removing the Capstan Motor (See Figs. 5-31)

From the joint bracket, remove the two screws ③ retaining the capstan motor.

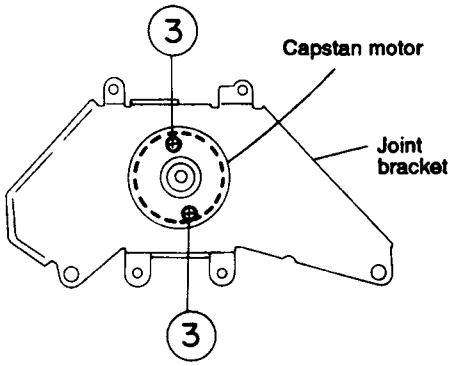

Fig.5-31

■ Removing the Flywheel (See Figs. 5-32,5-33)

1. Remove the head amp. & mechanism control P.C. board.
2. Remove the capstan motor assembly.
3. After turning over the cassette mechanism, remove the slit washers ⓐ and ⓑ fixing the capstan shafts R and L, and pull out the flywheels R and L respectively from behind the cassette mechanism.

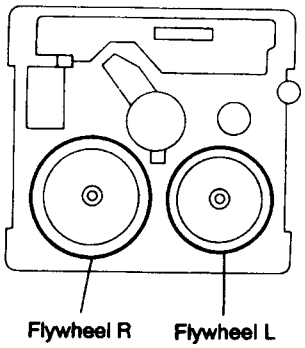

Fig.5-32

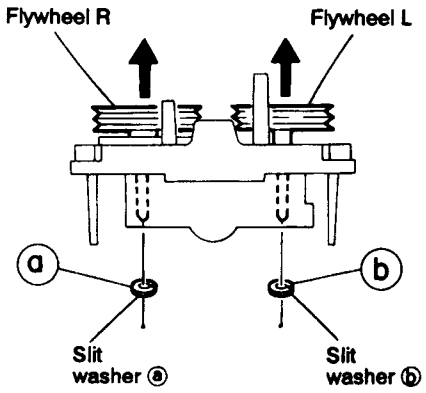

Fig.5-33

■ Removing the Reel Pulse P.C. Board and Solenoid (See Figs. 5-34)

1. Remove the five pawls (ⓒ, ⓓ, ⓔ, ⓕ and ⓖ) retaining the reel pulse P.C. board.
2. From the surface of the reel pulse P.C. board parts, remove the two pawls ⓗ and ⓘ retaining the solenoid.

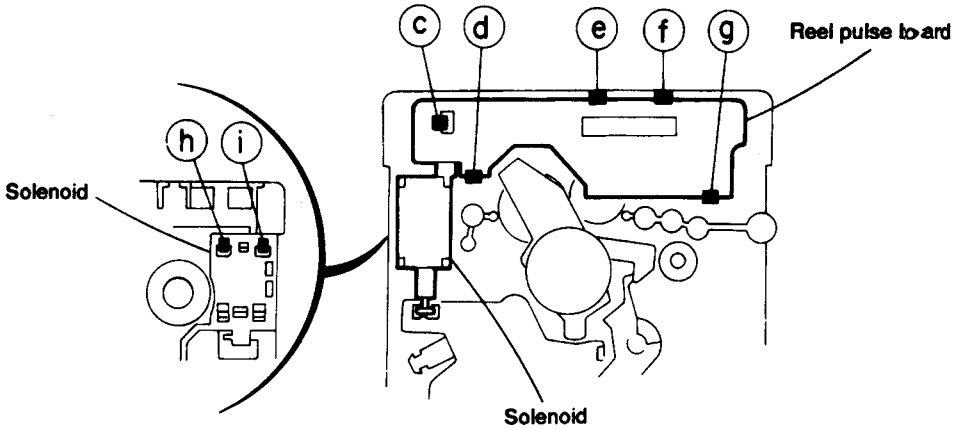

Fig.5-34

Flow of Functional Operation Until TOC Read

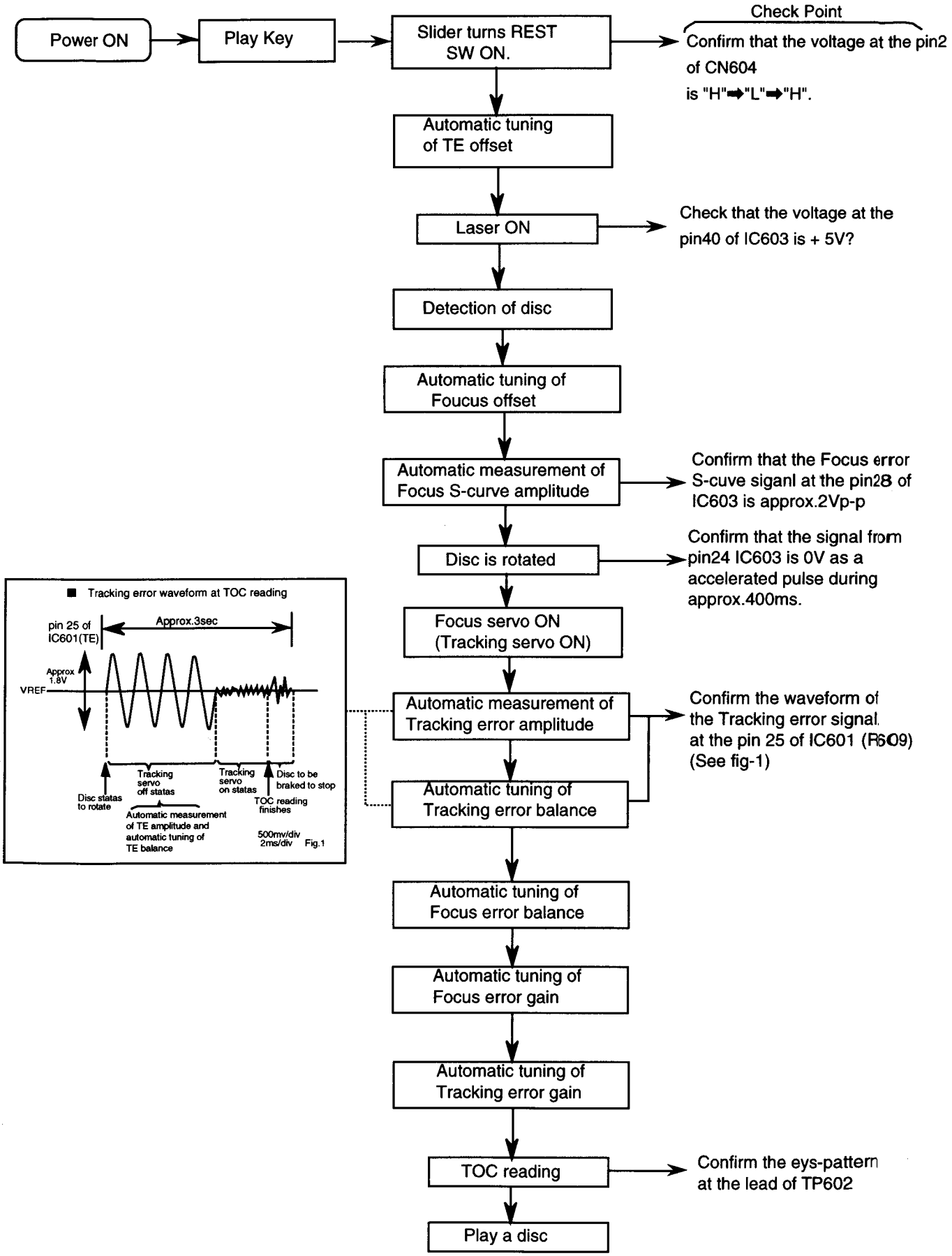

Maintenance of Laser Pickup

(1) Cleaning the pick up lens
Befor you replace the pick up, please try to clean the lens with a alcohol soaked cotton swab.

(2) Life of the laser diode (Fig.1)
When the life of the laser diode has expired, the following symptoms wil appear.
(1) The level of RF output (EFM output:amplitude of eye pattern) will below.

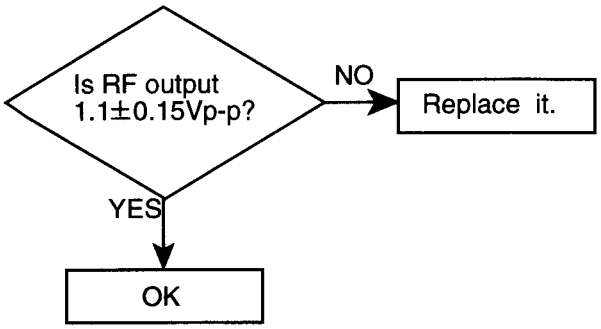

(Fig.1)

(3) Semi-fixed resistor on the APC PC board
The semi-fixed resistor on the APC printed circuit board which is attached to the pickup is used to adjust the laser power.Since this adjustment should be performed to match the characteristics of the whole optical block, do not touch the semi-fixed resistor.
If the laser power is lower than the specified value,the laser diode is almost worn out, and the laser pickup should be replaced.
If the semi-fixed resistor is adjusted while the pickup is functioning normally,the laser pickup may be damaged due to excessive current.

Replacement of Laser Pickup

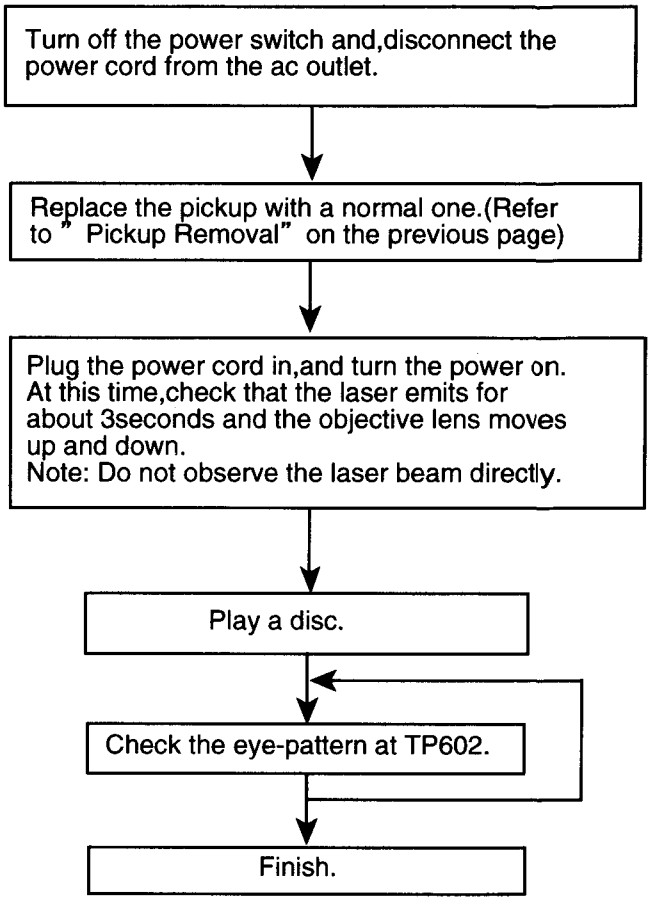

Main Adjustment

■ Measurement Instruments Required for Adjustment

1. Low frequency oscillator,
   This oscillator should have a capacity to output 0dBs to 600Ω at an oscillation frequency of 50Hz-20kHz.
2. Attenuator impedance : 600Ω
3. Electronic voltmeter
4. Frequency counter
5. Wow flutter meter
6. Test tape
   VTT712 : For Tape speed and wow flutter (3kHz)
   VTT724 : For Reference level (1kHz)
   TMT7036 : For Head angle(10kHz),Play back frequency characteristics(1kHz),and dubbing frequency characteristics(63,1,10kHz)
   Because of frequency-mixed tape with 63,1k,10k and 14kHz(250nWb/m -24dB).
   Use this tape together with a filter.
7. Blank tape
   TAPE Ⅰ : AC-225, TAPE Ⅱ : AC-514
8. Torque gauge : For play and back tension
   Forward ; TW2111A, Reverse ; TW2121A
   Fast Forward and Rewind ; TW2231A
9. Test disc
   : CTS-1000(12cm),GRG-1211(8cm)
10. Jitter meter

■ Measurement Conditions

Power supply voltage : AC110-240V(50/60Hz)
: 120V(60Hz)
: 230V(50Hz)
Reference output : Speaker 0.775V/6 Ω
: Headphone 0.0775V/32 Ω
Measurement
output terminal : Speaker out
:TP101(Mesuring for TUNER/DECK/CD)

Radio input signal
AM modulation frequency : 400Hz
Modulation factor : 30%
FM modulation frequency : 400Hz
Frequency displacement : 22.5kHz

Standard measurement positions of volume and switch
Sound mode : Off
Active-Bass : Off
Function switch : AUX
Main VOL. : Adjust to 0dBs
Mic MIX VOL. : MAX (U group only)

Precautions for Measurement
1. Apply 30pF and 33kΩ to the IF sweeper output side and 0.082μF and 100kΩ in series to the sweeper input side.
2. The IF sweeper output level should be made as low as possible within the adjustable range.
3. Since the IF sweeper is a fixed device, there is no need to adjust this sweeper.
4. Since a ceramic oscillator is used, there is no need to perform any MPX adjustment.
5. Since a fixed coil is used, there is no need to adjust the FM tracking.
6. The input and output earth systems are separated. In case of simultaneously measuring the voltage in both of the input and output systems with an electronic voltmeter for two channels, therefore, the earth should be connected particularly.
7. In the case of BTL connection amplifier, the minus terminal of speaker is not for earthing. Therefore, be sure not to connect any other earth terminal to this terminal. This system is of an OTL system.

■Arrangement of Adjusting Positions

Cassette mechanism section (Mechanism A section)

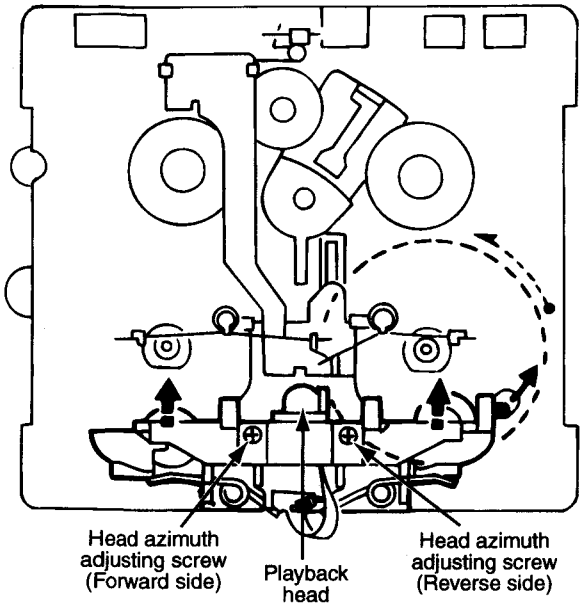

Cassette mechanism section (Back side)

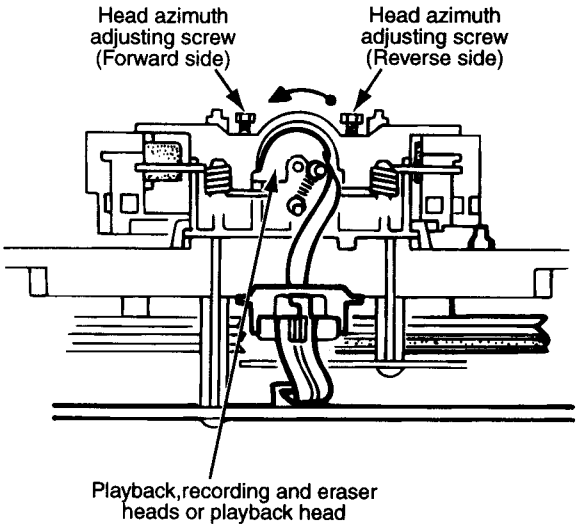

Cassette Mechanism Unit Section

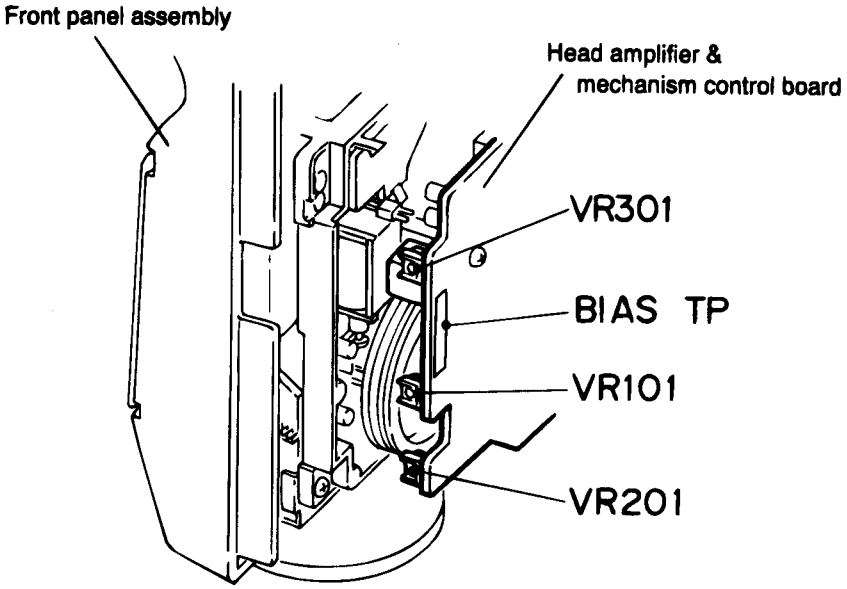

■Tape Recorder Section

Items	Measurement conditions	Measurement method	Standard values	Adjusting positions
Confirmation of head angle	Test tape :TMT7036(10kHz) Measurement output terminal :Speaker terminal Speaker R (Load resistor:3Ω) :Headphone terminal	1.Playback the test tape TMT7036(10kHz). 2.With the playback mechanism or recording & playback mechanism, adjust the head azimuth screw so that the forward and reverse output levels become maximum.After adjustment,lock the head azimuth at least by half a turn. 3.In either case,this adjustment should be performed in both the forward and reverse directions with the head azimuth screw.	Maximum output	Adjust the head azimuth screw only when the head has been changed.
Confirmation of tape speed	Test tape :VTT712(3kHz) or TMT7036(3kHz) Measurement output terminal :Headphone terminal	<Constant speed> Adjust VR301 so that the frequency counter reading becomes 3,010Hz±15Hz when playing back the test tape VTT712(3kHz)with the playback mechanism or playback and recording mechanism after ending forward winding of the tape.	Tape speed of decks (A and B) :3,010Hz ±15Hz	VR301

■Reference Values for Confirmation items

Items	Measurement conditions	Measurement method	Standard values	Adjusting positions
Double tape speed	Test tape :TMT7036(10kHz) Measurement output terminal :Speaker terminal Speaker R (Load resistance:3Ω) measurement output terminal :Headphone terminal	After setting to the double speed motor, confirm that the frequency counter reading becomes 4,800+400/-300Hz when the test tape VTT712 (3kHz) has been play back with the playback mechanism.	4,800+400/ -300Hz	Playback mechanism side
Difference between the forward and reverse speed. P.mecha and R/P mecha speed		When the test tape VTT712(3kHz) has been played back with the playback mechanism or recording and playback mechanism at the beginning of forward winding, the frequency counter reading of the difference between both of the mechanisms should be 6.0Hz or less.	6.0Hz or less	Both the playback and recording & playback mechanism
Wow & flutter	Test tape :TMT7036(10kHz) Measurement output terminal :Headphone terminal	When the test tape VTT712(3kHz) has been played back with the playback mechanism or recording and playback mechanism at the beginning of forward winding the frequency counter reading of wow& flutter should be 0.25% or less(WRMS).	0.25% or less (WRMS)	Both the playback and recording & playback mechanism

■Electrical Performance

Items	Measurement conditions	Measurement method	Standard values	Adjusting positions
Adjustment of recording bias current (Reference value)	*Mode : Forward or reverse mode *Recording mode *Test tape :AC-514 and AC-225 Measurement output terminal :Both recording and headphone terminals	1.With the recording and playback mechanism, load the test tapes(AC-514 to TYP Ⅱ and AC-225 to TYP Ⅰ),and set the mechanism to the recording and pausing conditions in advance. 2.After connecting 100Ω in series to the recorder head,measure the bias current with a valve voltmeter at both of the terminals. 3.After resetting the [PAUSE] mode,start recording. At this time,adjust VR101 for LcH and VR201 for RcH so that the recording bias current values become 4.0μA (TYP Ⅰ) and 4.20μA(TYP Ⅱ).	AC-225 :4.20μA AC-514 :4.0μA	LcH :VR101 RcH :VR201
Adjustment of recording and playback frequency characteristics	Reference frequency :1kHz and 10kHz (REF:-20dB) Test tape :TYP Ⅱ AC-514 Measurement input terminal :OSC IN	1.With the recording and playback mechanism,load the test tape(AC-514 to TYP Ⅱ),and set the mechanism to the recording and pausing condition in advance. 2.While repetitively inputting the reference frequency signal of 1kHz and 10kHz from OSC IN, record and playback the test tape. 3.While recording and playing back the test tape in TYP Ⅱ,adjust VR101 for LcH and VR201 for RcH so that the output deviation between 1kHz and 10kHz becomes -1dB±2dB.	Output deviation between 1kHz and 10kH :-1dB±2dB	LcH :VR101 RcH :VR201

■Reference Values for Electrical Function Confirmation Items

Items	Measurement conditions	Measurement method	Standard values	Adjusting positions
Recording bias frequency	*Recording and playback side forward or reverse *Test tape :TYP Ⅱ AC-514 *Measurement terminal BIAS TP on P.C.board	1.While changing over to and from BIAS 1 and 2, confirm that the frequency is changed. 2.With the recording and playback mechanism. load the test tape (AC-514 to TYP Ⅱ),and set the mechanism to the recording and pausing conditions in advance. 3.Confirm that the BIAS TP frequency on the P.C.board is 100kHz±6kHz.	100kHz ±6kHz	
Eraser current (Reference value)	*Recording and playback side forward or reverse *Recording mode *Test tape :AC-514 and AC-225 Measurement terminal Both of the eraser head	1.With the recording and playback mechanism, load the test tapes(AC-514 to TYP Ⅱ and AC-225 to TYP Ⅰ),and set the mechanism to the recording and pausing condition in advance. 2.After setting to the recording conditions,connect 1MΩ in series to the eraser head on the recording and playback mechanism side,and measure the eraser current from both of the eraser terminal.	TYP Ⅱ :120mA TYP Ⅰ :75mA	

Self Diagnosis Function of CD

1. Purpose

This function is designed to display an error to readily clarify the cause of such an error should any trouble occur in CD.

2. How to Use the Function

(1) Turn the microcomputer action of the set to [TEST] mode.

(2) Press CD PLAY + AM/FM + SLEEP on the remote control same time. Confirm that all of the LCDs have been turned on when set to the [TEST] mode subsequent to the step in item (2).

(3) When the CD trouble has occurred after starting CD, an error code will be displayed on the display section of LCD, etc.

3. Error code and location in trouble

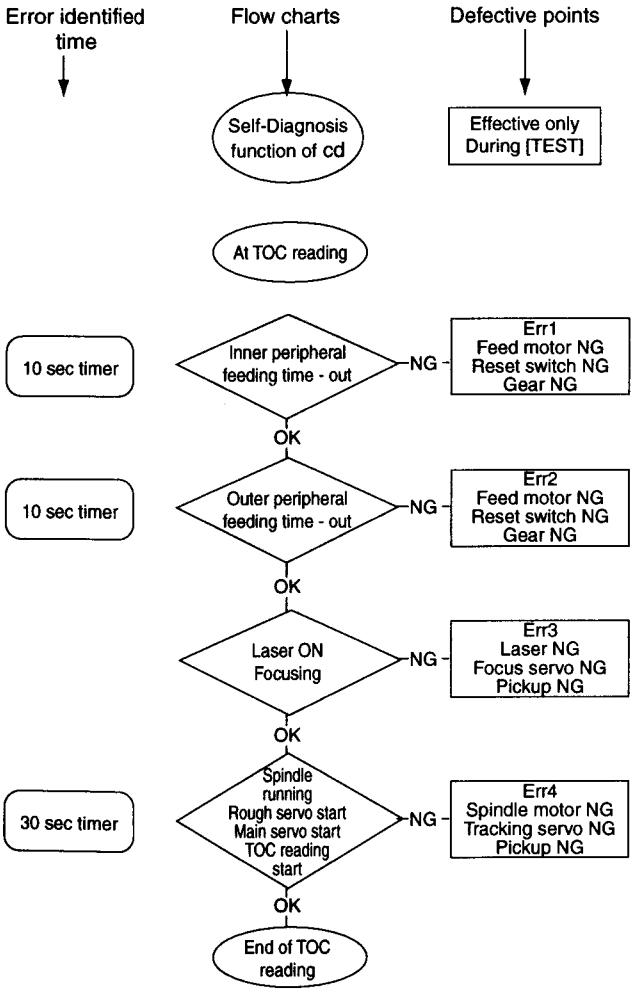

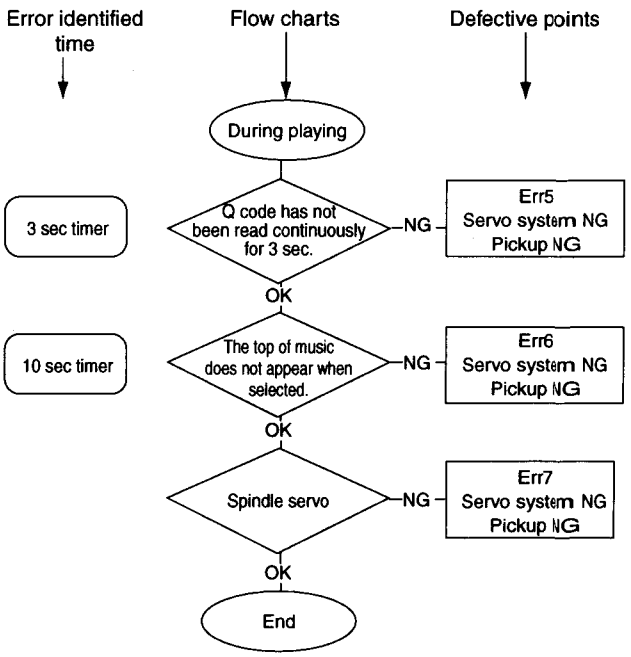

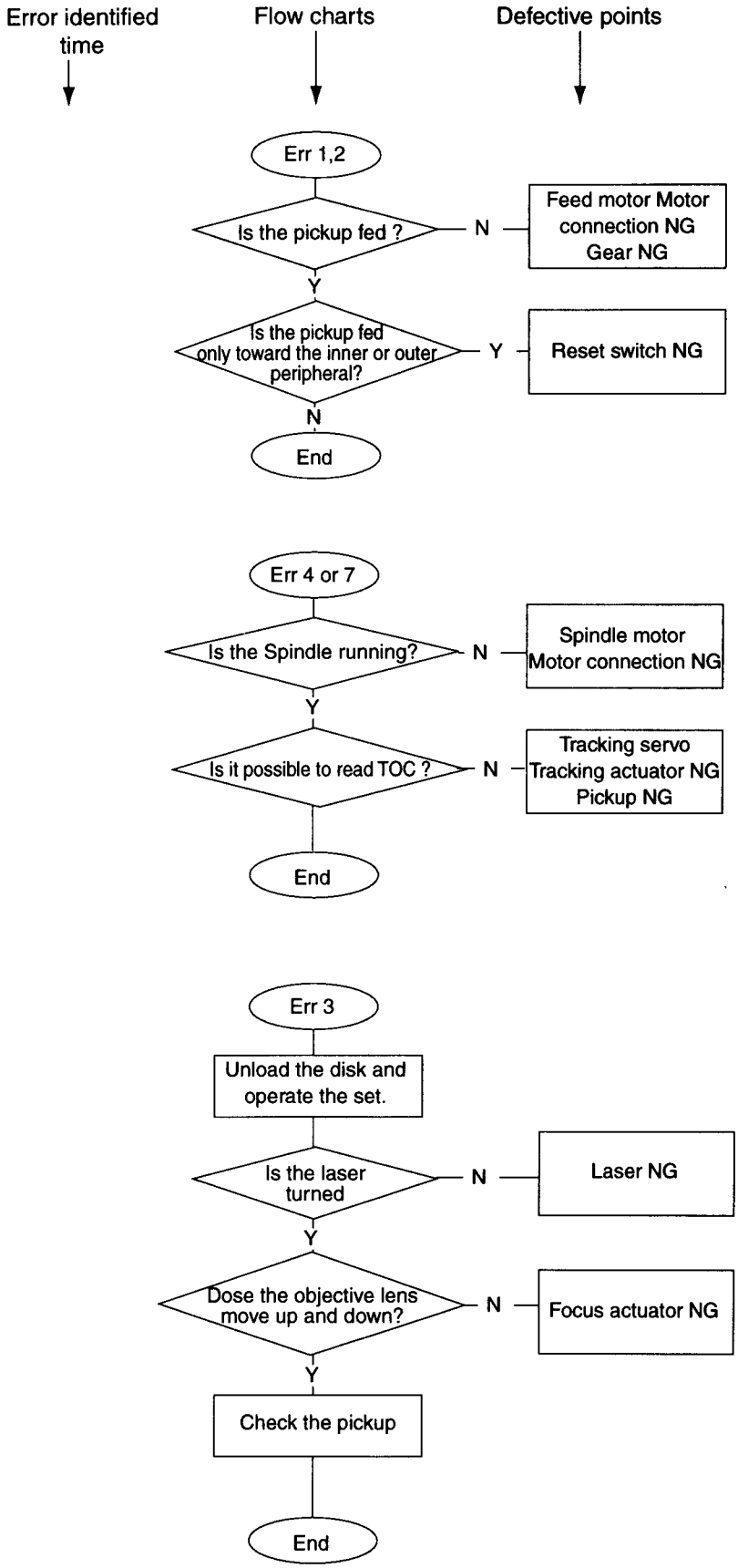
Error identified time
Flow charts
Defective points
Err 1,2
Is the pickup fed ?
N
Feed motor Motor connection NG Gear NG
Y
Is the pickup fed only toward the inner or outer peripheral?
Y
Reset switch NG
N
End
Err 4 or 7
Is the Spindle running?
N
Spindle motor Motor connection NG
Y
Is it possible to read TOC ?
N
Tracking servo Tracking actuator NG Pickup NG
End
Err 3
Unload the disk and operate the set.
Is the laser turned
N
Laser NG
Y
Dose the objective lens move up and down?
N
Focus actuator NG
Y
Check the pickup
End

■Block Diagrams

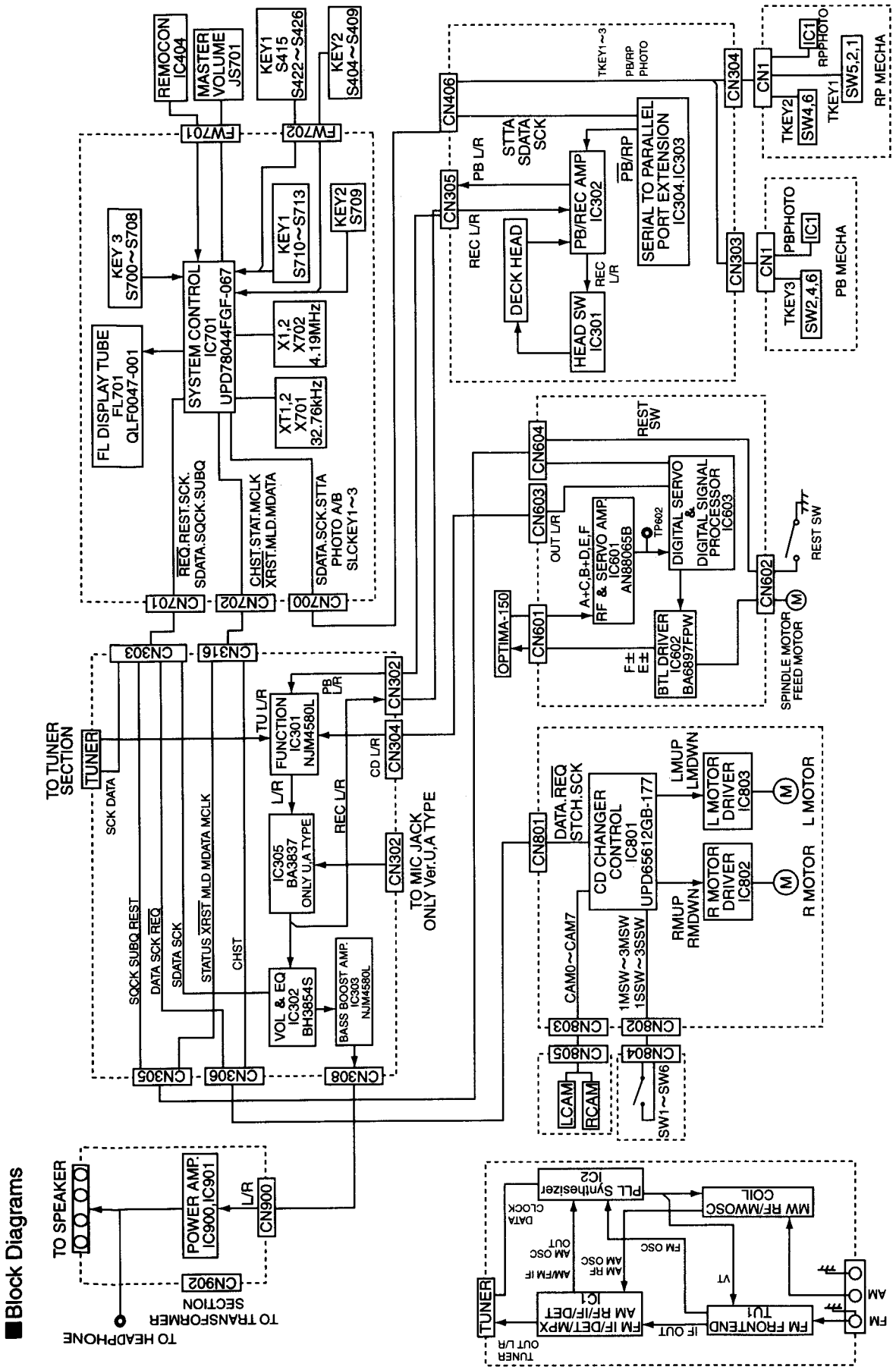

■ Head Amplifier & Mechanism Control Section

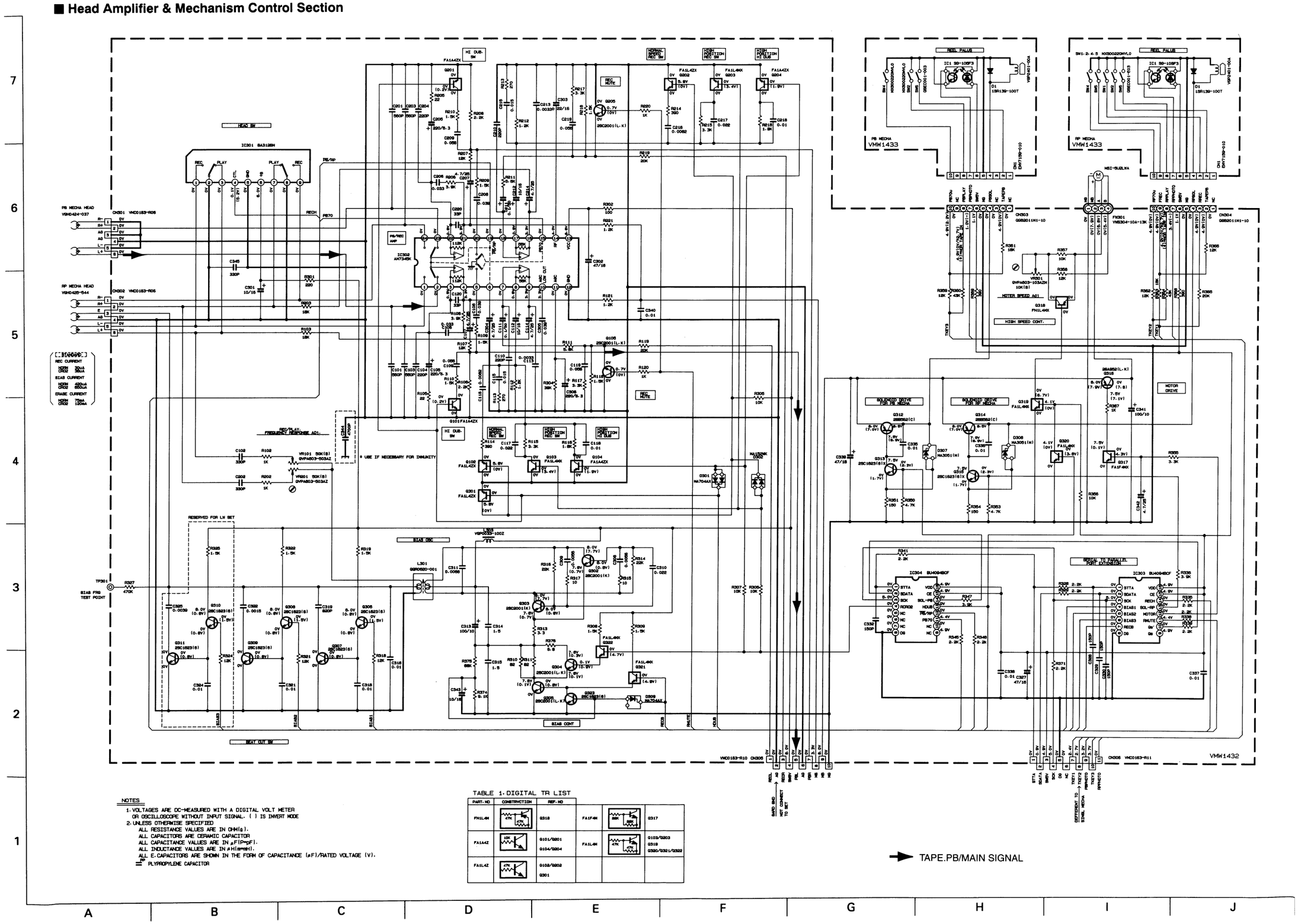

NOTES

1. VOLTAGES ARE DC-MEASURED WITH A DIGITAL VOLT METER OR OSCILLOSCOPE WITHOUT INPUT SIGNAL. ( ) IS INVERT MODE
2. UNLESS OTHERWISE SPECIFIED
   ALL RESISTANCE VALUES ARE IN OHM(Ω).
   ALL CAPACITORS ARE CERAMIC CAPACITOR
   ALL CAPACITANCE VALUES ARE IN μF(P=pF).
   ALL INDUCTANCE VALUES ARE IN μH(m=mH).
   ALL E-CAPACITORS ARE SHOWN IN THE FORM OF CAPACITANCE (μF)/RATED VOLTAGE (V).
   PP PLYPROPYLENE CAPACITOR

TABLE 1. DIGITAL TR LIST

PART NO	CONSTRUCTION	REF NO			
FN1L4M	47K 47K	G318	FA1F4M	22K 22K	G317
FA1A4Z	10K 47K	G101/G201 G104/G204	FA1L4M	47K 47K	G103/G203 G319 G320/G321/G322
FA1L4Z	47K 47K	G102/G202 G301			

■ CD Servo Control Section

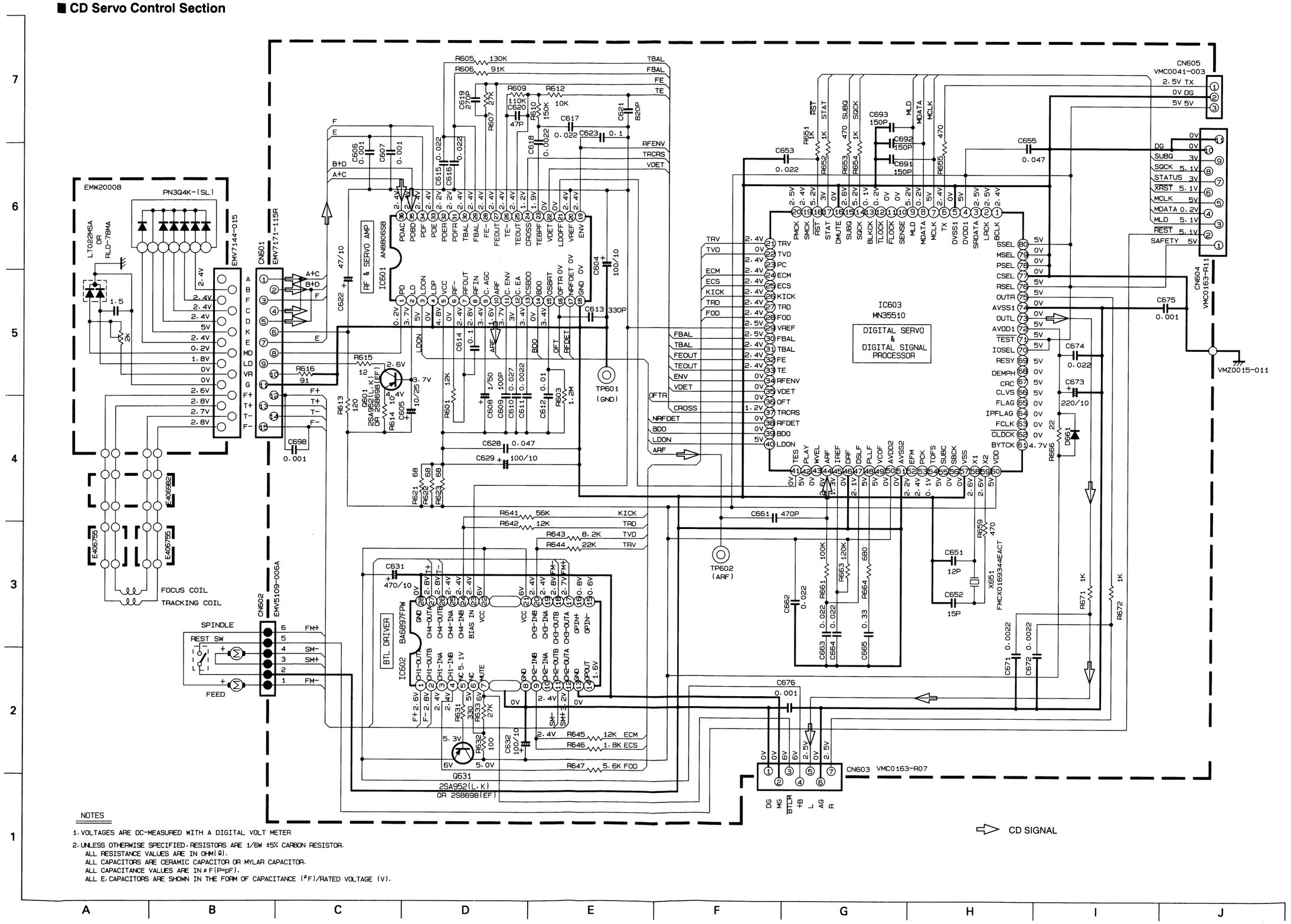

NOTES

1. VOLTAGES ARE DC-MEASURED WITH A DIGITAL VOLT METER
2. UNLESS OTHERWISE SPECIFIED, RESISTORS ARE 1/6W ±5% CARBON RESISTOR.
   ALL RESISTANCE VALUES ARE IN OHM(Ω).
   ALL CAPACITORS ARE CERAMIC CAPACITOR OR MYLAR CAPACITOR.
   ALL CAPACITANCE VALUES ARE IN μF(P=pF).
   ALL E.CAPACITORS ARE SHOWN IN THE FORM OF CAPACITANCE (μF)/RATED VOLTAGE (V).

■ CD Changer Control Section

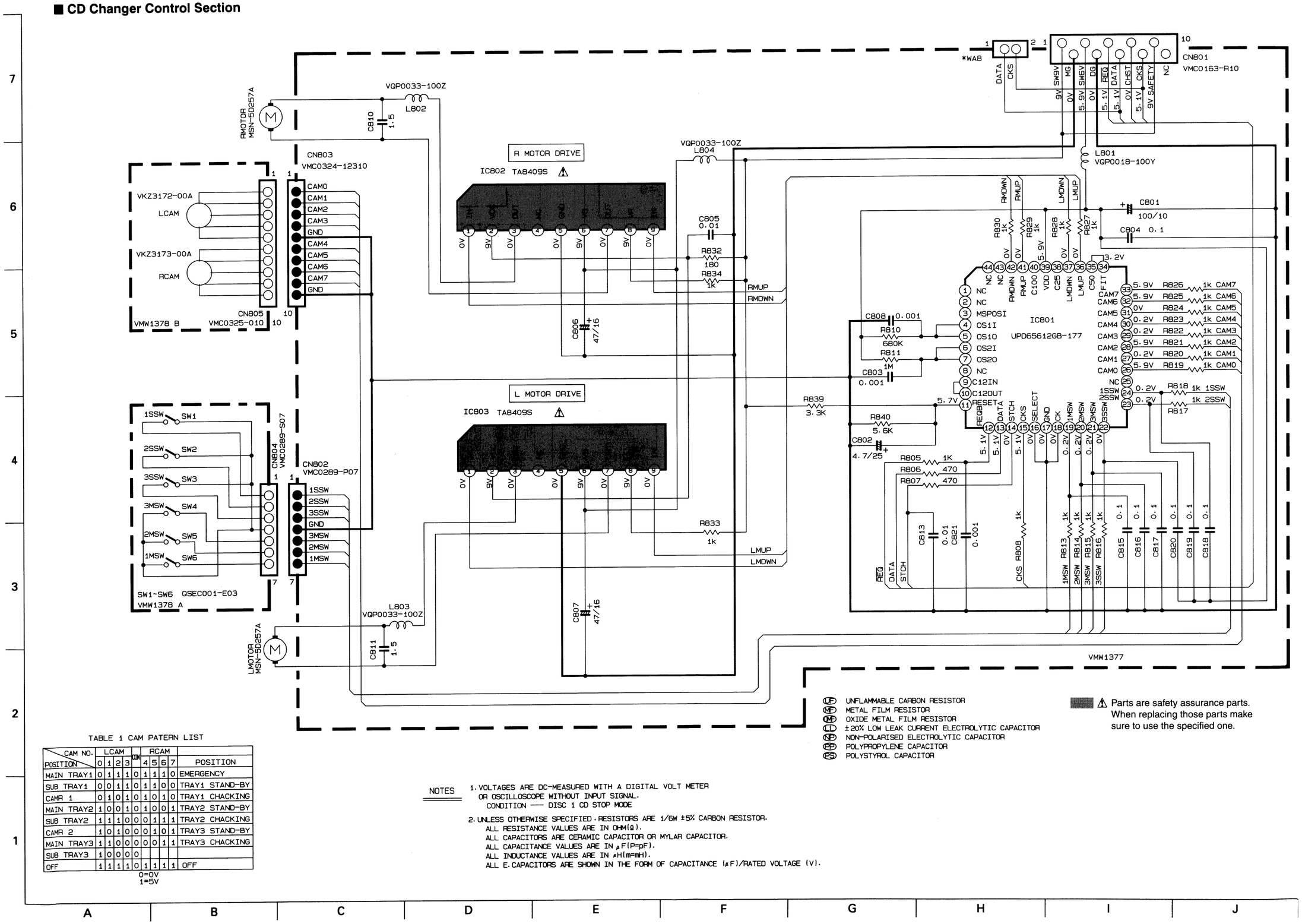

UF UNFLAMMABLE CARBON RESISTOR
MF METAL FILM RESISTOR
OMF OXIDE METAL FILM RESISTOR
EL ±20% LOW LEAK CURRENT ELECTROLYTIC CAPACITOR
NP NON-POLARISED ELECTROLYTIC CAPACITOR
PP POLYPROPYLENE CAPACITOR
PS POLYSTYROL CAPACITOR

⚠ Parts are safety assurance parts. When replacing those parts make sure to use the specified one.

TABLE 1 CAM PATERN LIST

CAM NO. / POSITION	LCAM 0	1	2	3	ON	RCAM 4	5	6	7	POSITION
MAIN TRAY1	0	1	1	1	0	1	1	1	0	EMERGENCY
SUB TRAY1	0	0	1	1	0	1	1	0	0	TRAY1 STAND-BY
CAMR 1	0	1	0	1	0	1	0	1	0	TRAY1 CHACKING
MAIN TRAY2	1	0	0	1	0	1	0	0	1	TRAY2 STAND-BY
SUB TRAY2	1	1	1	0	0	0	1	1	1	TRAY2 CHACKING
CAMR 2	1	0	1	0	0	0	1	0	1	TRAY3 STAND-BY
MAIN TRAY3	1	1	0	0	0	0	0	1	1	TRAY3 CHACKING
SUB TRAY3	1	0	0	0	0					
OFF	1	1	1	1	0	1	1	1	1	OFF

0=0V
1=5V

NOTES

1. VOLTAGES ARE DC-MEASURED WITH A DIGITAL VOLT METER OR OSCILLOSCOPE WITHOUT INPUT SIGNAL.
   CONDITION —— DISC 1 CD STOP MODE
2. UNLESS OTHERWISE SPECIFIED, RESISTORS ARE 1/6W ±5% CARBON RESISTOR.
   ALL RESISTANCE VALUES ARE IN OHM(Ω).
   ALL CAPACITORS ARE CERAMIC CAPACITOR OR MYLAR CAPACITOR.
   ALL CAPACITANCE VALUES ARE IN μF(P=pF).
   ALL INDUCTANCE VALUES ARE IN μH(m=mH).
   ALL E.CAPACITORS ARE SHOWN IN THE FORM OF CAPACITANCE (μF)/RATED VOLTAGE (V).

■ Tuner Section

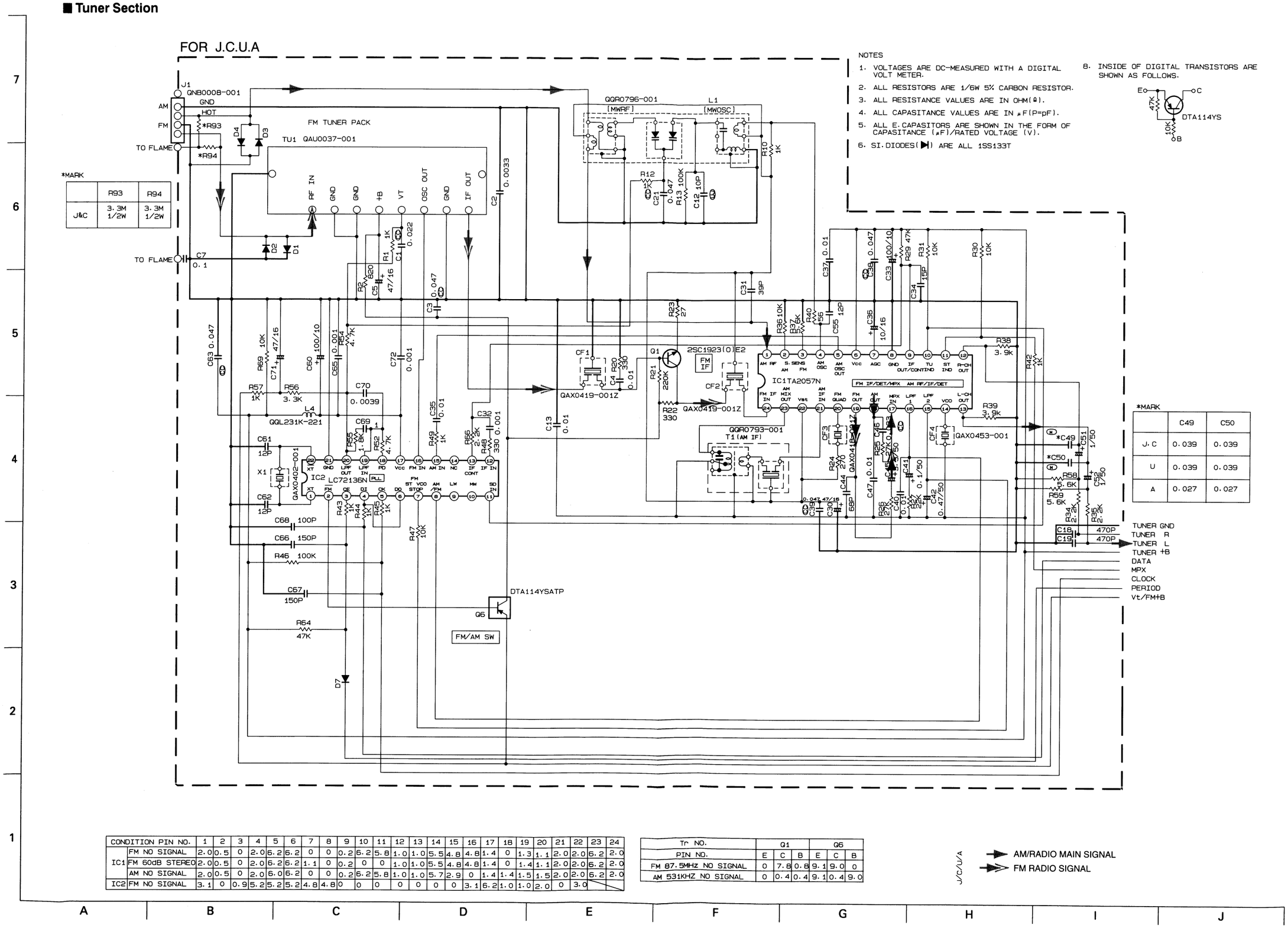

NOTES

1. VOLTAGES ARE DC-MEASURED WITH A DIGITAL VOLT METER.
2. ALL RESISTORS ARE 1/6W 5% CARBON RESISTOR.
3. ALL RESISTANCE VALUES ARE IN OHM(Ω).
4. ALL CAPASITANCE VALUES ARE IN μF(P=pF).
5. ALL E.CAPASITORS ARE SHOWN IN THE FORM OF CAPASITANCE (μF)/RATED VOLTAGE (V).
6. SI.DIODES(▶) ARE ALL 1SS133T
8. INSIDE OF DIGITAL TRANSISTORS ARE SHOWN AS FOLLOWS.

*MARK

	R93	R94
J&C	3.3M 1/2W	3.3M 1/2W

*MARK

	C49	C50
J.C	0.039	0.039
U	0.039	0.039
A	0.027	0.027

CONDITION	PIN NO.	1	2	3	4	5	6	7	8	9	10	11	12	13	14	15	16	17	18	19	20	21	22	23	24
IC1	FM NO SIGNAL	2.0	0.5	0	2.0	6.2	6.2	0	0	0.2	6.2	5.8	1.0	1.0	5.5	4.8	4.8	1.4	0	1.3	1.1	2.0	2.0	6.2	2.0
	FM 60dB STEREO	2.0	0.5	0	2.0	6.2	6.2	1.1	0	0.2	0	0	1.0	1.0	5.5	4.8	4.8	1.4	0	1.4	1.1	2.0	2.0	6.2	2.0
	AM NO SIGNAL	2.0	0.5	0	2.0	6.0	6.2	0	0	0.2	6.2	5.8	1.0	1.0	5.7	2.9	0	1.4	1.4	1.5	1.5	2.0	2.0	6.2	2.0
IC2	FM NO SIGNAL	3.1	0	0.9	5.2	5.2	5.2	4.8	4.8	0	0	0	0	0	0	0	3.1	6.2	1.0	1.0	2.0	0	3.0		

Tr NO.	Q1			Q6		
PIN NO.	E	C	B	E	C	B
FM 87.5MHz NO SIGNAL	0	7.8	0.8	9.1	9.0	0
AM 531KHZ NO SIGNAL	0	0.4	0.4	9.1	0.4	9.0

J/C/U/A

→ AM/RADIO MAIN SIGNAL
⇒ FM RADIO SIGNAL

■ Tuner Section

FOR B.E.EN

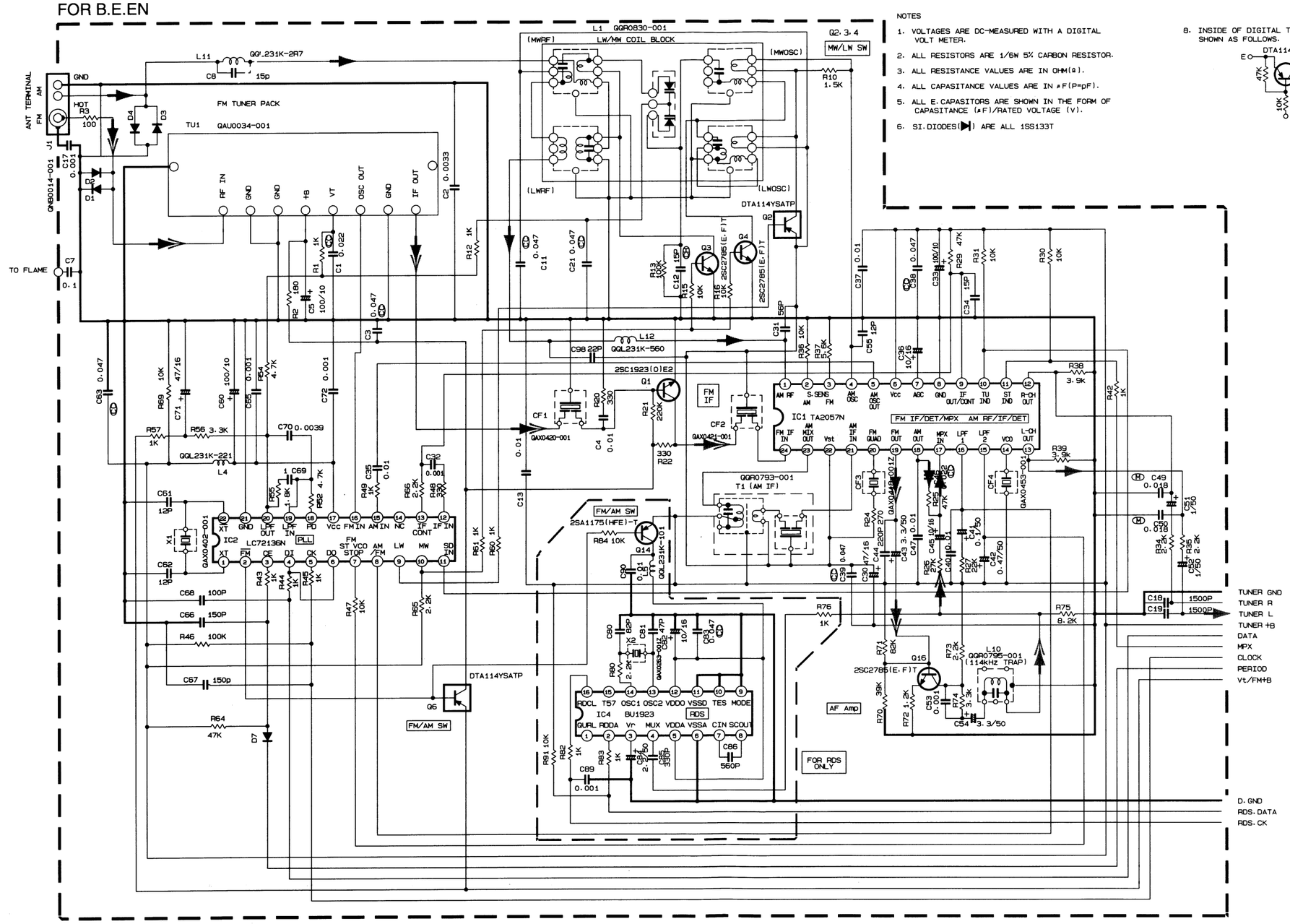

NOTES

1. VOLTAGES ARE DC-MEASURED WITH A DIGITAL VOLT METER.
2. ALL RESISTORS ARE 1/6W 5% CARBON RESISTOR.
3. ALL RESISTANCE VALUES ARE IN OHM(Ω).
4. ALL CAPASITANCE VALUES ARE IN μF(P=pF).
5. ALL E. CAPASITORS ARE SHOWN IN THE FORM OF CAPASITANCE (μF)/RATED VOLTAGE (V).
6. SI. DIODES(▶|) ARE ALL 1SS133T
8. INSIDE OF DIGITAL TRANSISTORS ARE SHOWN AS FOLLOWS.

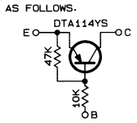

Tr NO.	Q1			Q6			Q16		
PIN NO.	E	C	B	E	C	B	E	C	B
FM 87.5MHz NO SIGNAL	0	7.8	0.8	9.0	8.9	0	1.0	3.5	1.6
AM 522KHz NO SIGNAL	0	0	0	9.0	0	8.9	1.0	3.5	1.6
Tr NO.	Q2			Q3			Q4		
PIN NO.	E	C	B	E	C	B	E	C	B
AM 522KHz NO SIGNAL	2.0	2.0	0.1	0	0	0.7	0	0	0.7
AM 144KHz NO SIGNAL	2.0	2.0	2.0	0	0	0.1	0	0	0.1

	CONDITION PIN NO.	1	2	3	4	5	6	7	8	9	10	11	12	13	14	15	16	17	18	19	20	21	22	23	24
IC1	FM NO SIGNAL	2.0	0.6	0	2.0	6.3	6.3	0	0	0.3	6.3	6.0	1.1	1.1	5.6	4.9	4.9	1.4	0	1.3	1.2	2.0	2.0	6.3	2.0
	FM 60dB STEREO	2.0	0.6	0	2.0	6.3	6.3	1.1	0	0.3	0	0	1.1	1.1	5.6	5.1	4.9	1.4	0	1.5	1.2	2.0	2.0	6.3	2.0
	AM NO SIGNAL	2.0	0.6	0	2.0	6.0	5.2	0	0	0.3	6.3	6.0	1.1	1.1	5.8	2.9	0	1.4	1.4	1.5	1.6	2.0	2.0	6.3	2.0
IC2	FM NO SIGNAL	3.1	0	0.9	5.3	5.5	5.3	4.9	4.9	2.0	4.8	6.3	0	0	0	0	3.1	6.2	1.0	1.0	4.6	0	3.0		

B/E/EN

→ AM/RADIO MAIN SIGNAL

⇒ FM RADIO SIGNAL

■ Tuner Section

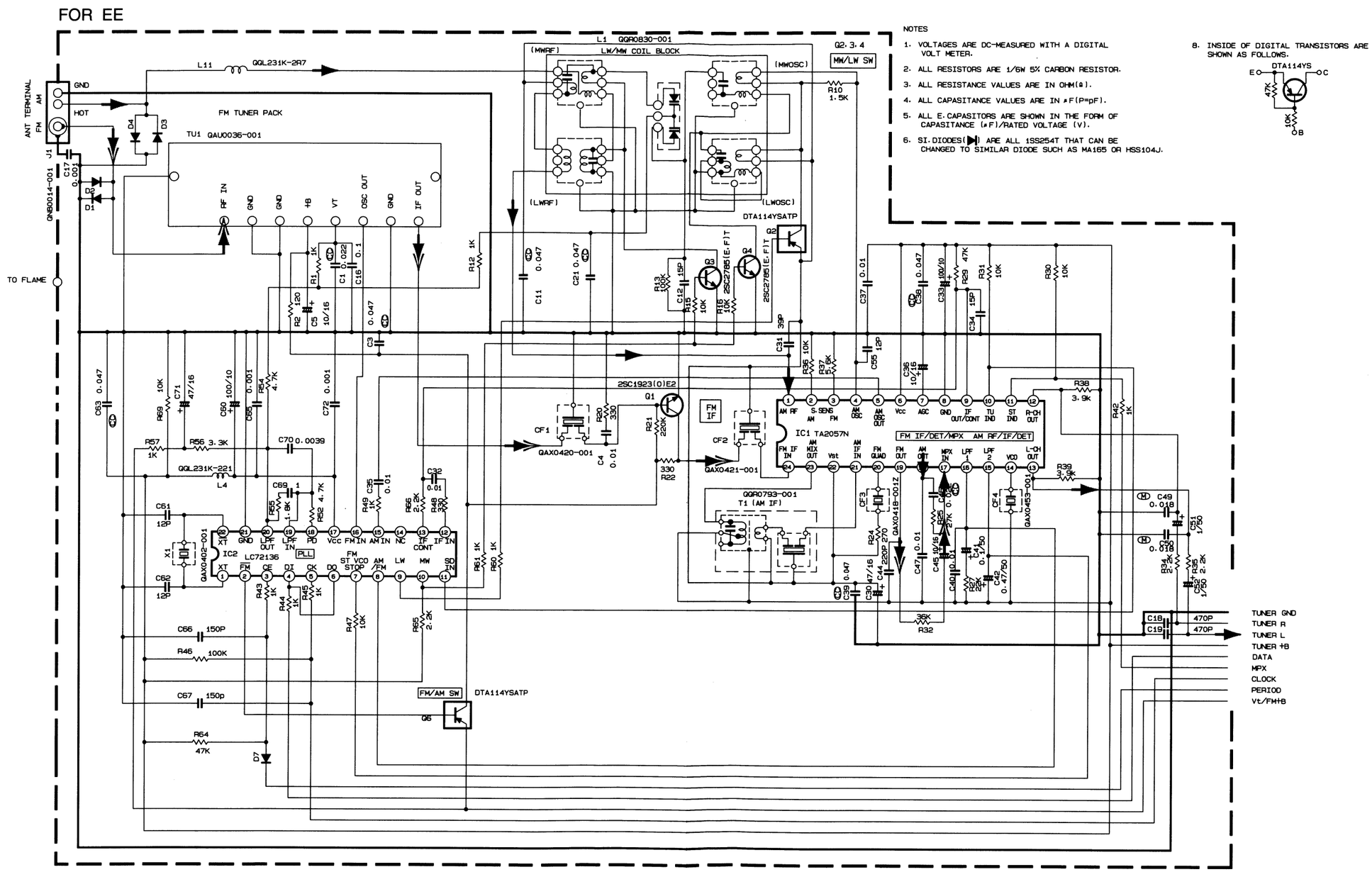

NOTES

1. VOLTAGES ARE DC-MEASURED WITH A DIGITAL VOLT METER.
2. ALL RESISTORS ARE 1/6W 5% CARBON RESISTOR.
3. ALL RESISTANCE VALUES ARE IN OHM(Ω).
4. ALL CAPASITANCE VALUES ARE IN μF(P=pF).
5. ALL E.CAPASITORS ARE SHOWN IN THE FORM OF CAPASITANCE (μF)/RATED VOLTAGE (V).
6. SI.DIODES(▶|) ARE ALL 1SS254T THAT CAN BE CHANGED TO SIMILAR DIODE SUCH AS MA165 OR HSS104J.
8. INSIDE OF DIGITAL TRANSISTORS ARE SHOWN AS FOLLOWS.

	CONDITION PIN NO.	1	2	3	4	5	6	7	8	9	10	11	12	13	14	15	16	17	18	19	20	21	22	23	24
IC1	FM NO SIGNAL	2.0	0.6	0	2.0	6.3	6.3	0	0	0.3	6.3	6.0	1.1	1.1	5.6	4.9	4.9	1.4	0	1.3	1.2	2.0	2.0	6.3	2.0
	FM 60dB STEREO	2.0	0.6	0	2.0	6.3	6.3	1.1	0	0.3	0	0	1.1	1.1	5.6	5.1	4.9	1.4	0	1.5	1.2	2.0	2.0	6.3	2.0
	AM NO SIGNAL	2.0	0.6	0	2.0	6.0	5.2	0	0	0.3	6.3	6.0	1.1	1.1	5.8	2.9	0	1.4	1.4	1.5	1.6	2.0	2.0	6.3	2.0
IC2	FM NO SIGNAL	3.1	0	0.9	5.3	5.5	5.3	4.9	4.9	2.0	4.8	5.3	0	0	0	0	3.1	6.2	1.0	1.0	4.6	0	3.0		

Tr NO.	Q1			Q6		
PIN NO.	E	C	B	E	C	B
FM 87.5MHz NO SIGNAL	0	7.8	0.8	9.0	8.9	0
AM 522KHz NO SIGNAL	0	0	0	9.0	0	8.9

Tr NO.	Q2			Q3			Q4		
PIN NO.	E	C	B	E	C	B	E	C	B
AM 522KHz NO SIGNAL	2.0	2.0	0.1	0	0	0.7	0	0	0.7
AM 144KHz NO SIGNAL	2.0	2.0	2.0	0	0	0.1	0	0	0.1

→ AM/RADIO MAIN SIGNAL
⇒ FM RADIO SIGNAL

■ Function & Bass Boost Amplifier/Regulator Section

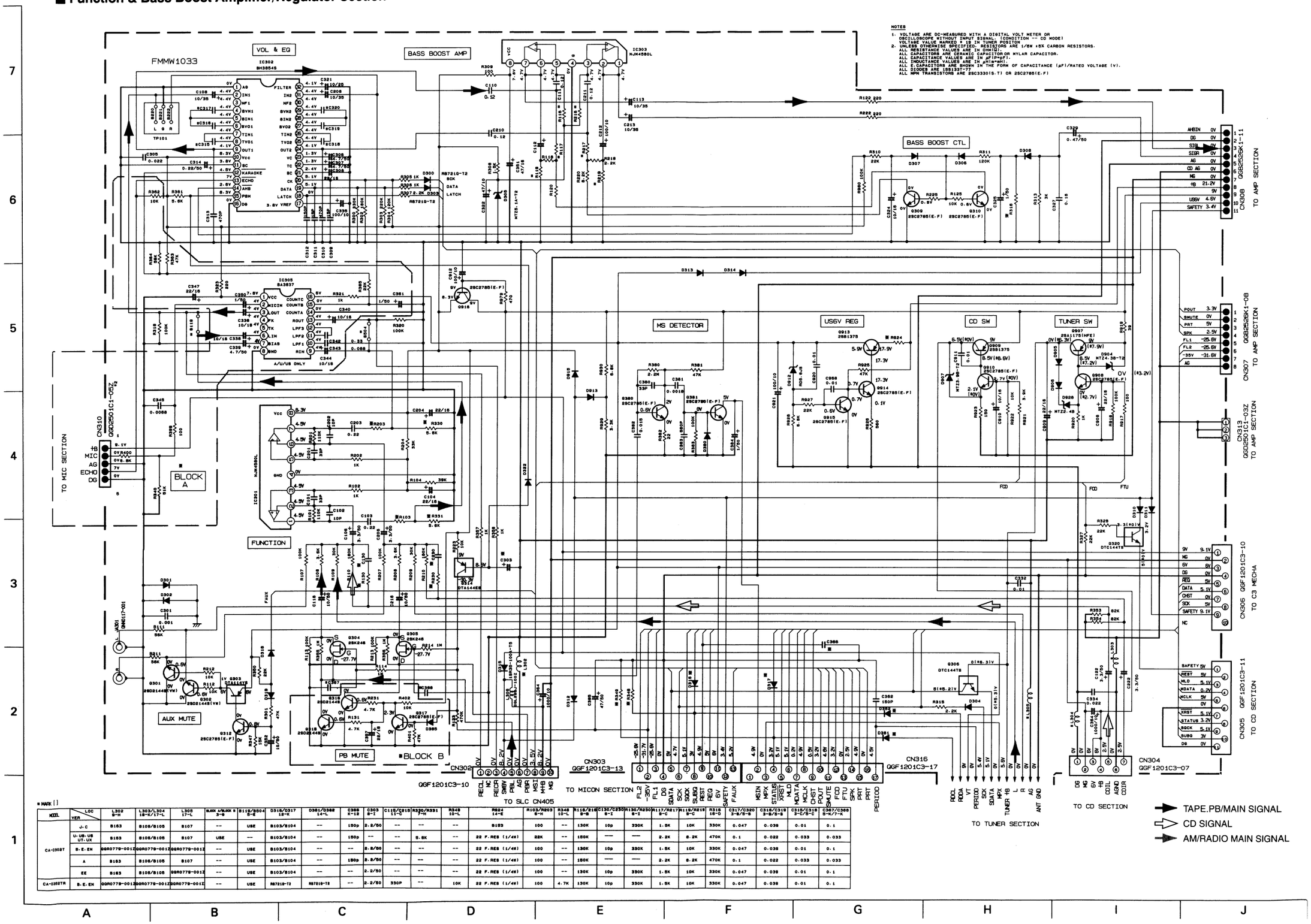

NOTES

1. VOLTAGE ARE DC-MEASURED WITH A DIGITAL VOLT METER OR OSCILLOSCOPE WITHOUT INPUT SIGNAL. (CONDITION -- CD MODE) VOLTAGE VALUE MARKED * 15 IN TUNER POSITION
2. UNLESS OTHERWISE SPECIFIED. RESISTORS ARE 1/6W ±5% CARBON RESISTORS.
   ALL RESISTANCE VALUES ARE IN OHM(Ω).
   ALL CAPACITORS ARE CERAMIC CAPACITOR OR MYLAR CAPACITOR.
   ALL CAPACITANCE VALUES ARE IN μF(P=pF).
   ALL INDUCTANCE VALUES ARE IN μH(m=mH).
   ALL E.CAPACITORS ARE SHOWN IN THE FORM OF CAPACITANCE (μF)/RATED VOLTAGE (V).
   ALL DIODES ARE 1SS133T-77
   ALL NPN TRANSISTORS ARE 2SC3330(S.T) OR 2SC2785(E.F)

* MARK ( )

MODEL	LOC / VER	L302 9-H	L303/L304 18-K/17-L	L305 17-L	BLOCK A/BLOCK B 3-B	B119/B504 8-E	D318/D317 12-K	D381/D382 14-L	C388 K-12	C303 8-I	C115/C215 11-C	R330/R331 7-H	R349 10-L	R624 14-E	R103/R203 8-H	R348 10-L	R118/R219 8-B	C130/C230 8-I	R130/R230 8-I	R117/R217 8-C	R119/R219 8-C	R316 16-D	C317/C320 3-B/5-B	C318/C319 3-B/5-B	C318/C319 3-C/5-C	C367/C368 5-K/7-K
CA-D302T	J.C	B163	B108/B105	B107	--	USE	B103/B104	--	150p	2.2/50	--	--	--	B163	100	--	130K	10p	330K	1.5K	10K	330K	0.047	0.039	0.01	0.1
	U.US.US UT.UX	B163	B108/B105	B107	USE	--	B103/B104	--	150p	--	--	5.6K	--	22 F.RES (1/4W)	22K	--	150K	—	—	2.2K	8.2K	470K	0.1	0.022	0.033	0.033
	B.E.EN	QGR0779-001Z	QGR0779-001Z	QGR0779-001Z	--	USE	B103/B104	--	--	2.2/50	--	--	--	22 F.RES (1/4W)	100	--	130K	10p	330K	1.5K	10K	330K	0.047	0.039	0.01	0.1
	A	B163	B108/B105	B107	--	USE	B103/B104	--	150p	2.2/50	--	--	--	22 F.RES (1/4W)	100	--	150K	—	—	2.2K	8.2K	470K	0.1	0.022	0.033	0.033
	EE	B163	B108/B105	QGR0779-001Z	--	USE	B103/B104	--	--	2.2/50	--	--	--	22 F.RES (1/4W)	100	--	130K	10p	330K	1.5K	10K	330K	0.047	0.039	0.01	0.1
CA-D302TR	B.E.EN	QGR0779-001Z	QGR0779-001Z	QGR0779-001Z	--	USE	R8721Q-T2	R8721Q-T2	--	2.2/50	330P	--	10K	22 F.RES (1/4W)	100	4.7K	130K	10p	330K	1.5K	10K	330K	0.047	0.039	0.01	0.1

■ System CPU & Operation Switch Sec

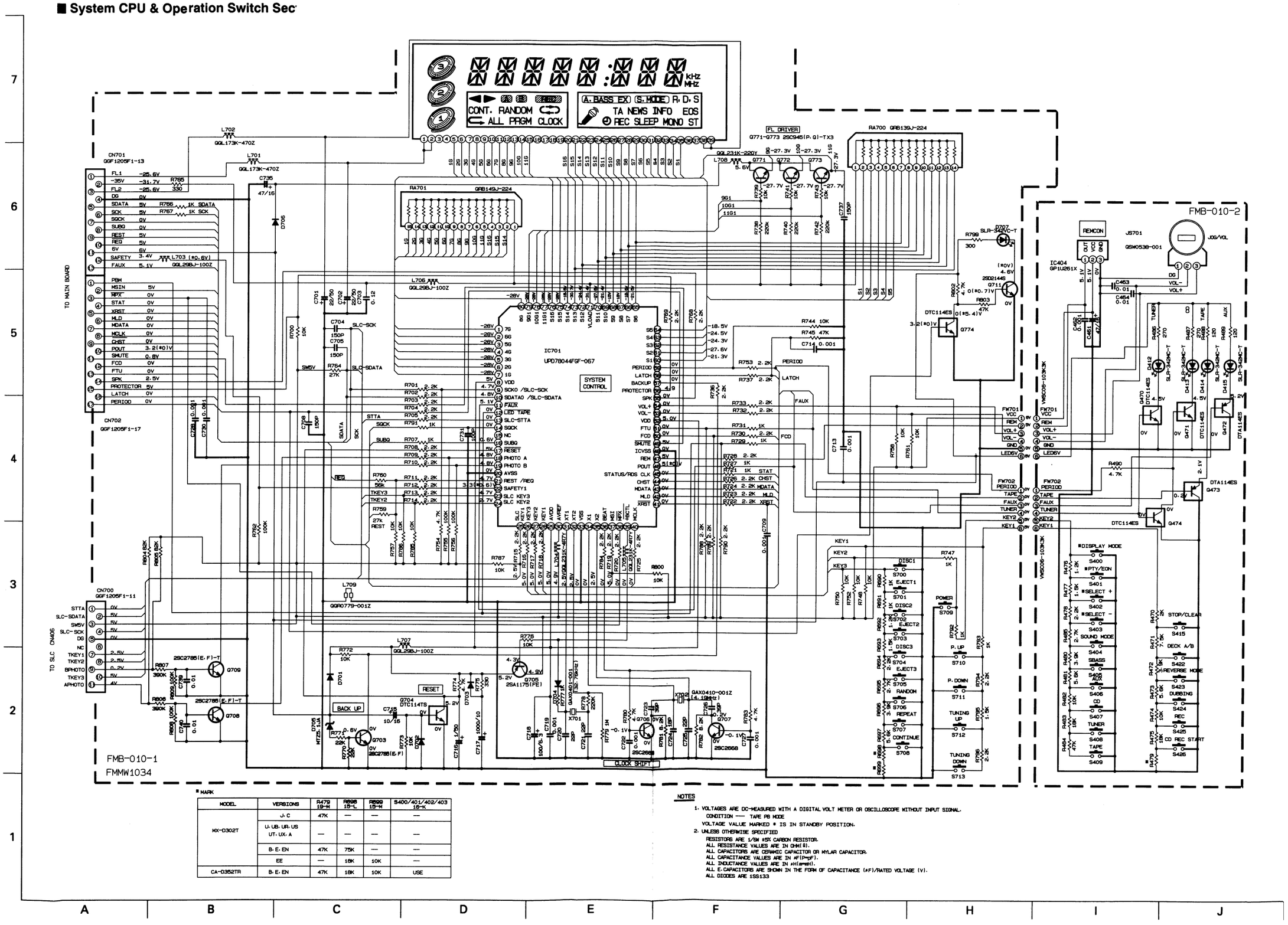

■ MARK

MODEL	VERSIONS	R479 19-M	R898 15-L	R899 15-M	S400/401/402/403 16-K
MX-D302T	J. C	47K	—	—	—
	U. UB. UR. US UT. UX. A	—	—	—	—
	B. E. EN	47K	75K	—	—
	EE	—	18K	10K	—
CA-D352TR	B. E. EN	47K	18K	10K	USE

NOTES

1. VOLTAGES ARE DC-MEASURED WITH A DIGITAL VOLT METER OR OSCILLOSCOPE WITHOUT INPUT SIGNAL.
   CONDITION —— TAPE PB MODE
   VOLTAGE VALUE MARKED * IS IN STANDBY POSITION.
2. UNLESS OTHERWISE SPECIFIED
   RESISTORS ARE 1/8W ±5% CARBON RESISTOR.
   ALL RESISTANCE VALUES ARE IN OHM(Ω).
   ALL CAPACITORS ARE CERAMIC CAPACITOR OR MYLAR CAPACITOR.
   ALL CAPACITANCE VALUES ARE IN μF(P=pF).
   ALL INDUCTANCE VALUES ARE IN μH(m=mH).
   ALL E.CAPACITORS ARE SHOWN IN THE FORM OF CAPACITANCE (μF)/RATED VOLTAGE (V).
   ALL DIODES ARE 1SS133

■ Power Amplifier & Regulator Section

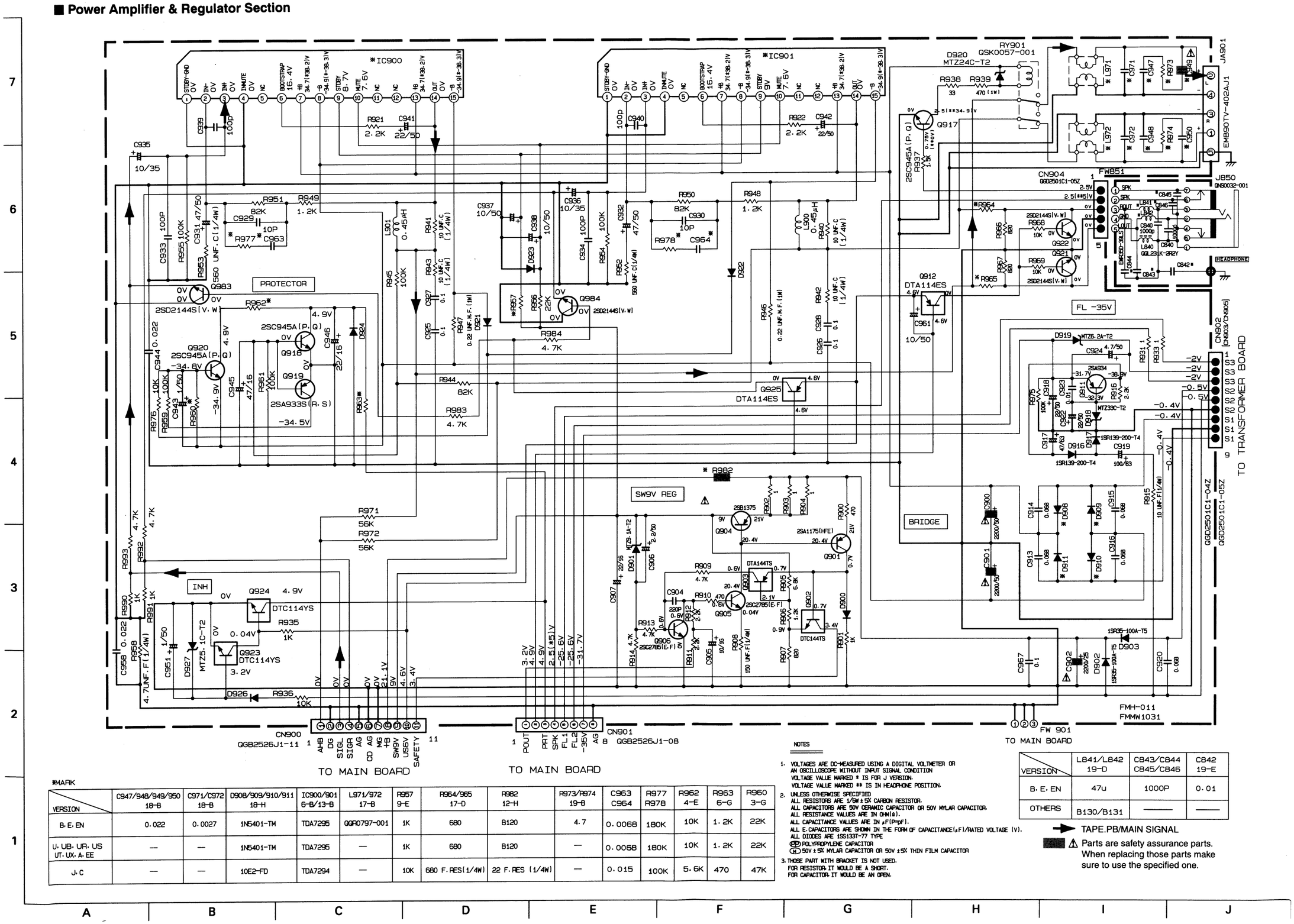

NOTES

1. VOLTAGES ARE DC-MEASURED USING A DIGITAL VOLTMETER OR AN OSCILLOSCOPE WITHOUT INPUT SIGNAL CONDITION
   VOLTAGE VALUE MARKED * IS FOR J VERSION.
   VOLTAGE VALUE MARKED ** IS IN HEADPHONE POSITION.
2. UNLESS OTHERWISE SPECIFIED
   ALL RESISTORS ARE 1/6W ±5% CARBON RESISTOR.
   ALL CAPACITORS ARE 50V CERAMIC CAPACITOR OR 50V MYLAR CAPACITOR.
   ALL RESISTANCE VALUES ARE IN OHM(Ω).
   ALL CAPACITANCE VALUES ARE IN μF(P=pF).
   ALL E.CAPACITORS ARE SHOWN IN THE FORM OF CAPACITANCE(μF)/RATED VOLTAGE (V).
   ALL DIODES ARE 1SS133T-77 TYPE
   (PP) POLYPROPYLENE CAPACITOR
   (M) 50V ±5% MYLAR CAPACITOR OR 50V ±5% THIN FILM CAPACITOR
3. THOSE PART WITH BRACKET IS NOT USED.
   FOR RESISTOR: IT WOULD BE A SHORT.
   FOR CAPACITOR: IT WOULD BE AN OPEN.

*MARK

VERSION	C947/948/949/950 18-B	C971/C972 18-B	D908/909/910/911 18-H	IC900/901 6-B/13-B	L971/972 17-B	R957 9-E	R964/965 17-D	R982 12-H	R973/R974 19-B	C963 C964	R977 R978	R962 4-E	R963 6-G	R960 3-G
B.E.EN	0.022	0.0027	1N5401-TM	TDA7295	QQR0797-001	1K	680	B120	4.7	0.0068	180K	10K	1.2K	22K
U.UB.UR.US UT.UX.A.EE	—	—	1N5401-TM	TDA7295	—	1K	680	B120	—	0.0068	180K	10K	1.2K	22K
J.C	—	—	10E2-FD	TDA7294	—	10K	680 F.RES(1/4W)	22 F.RES (1/4W)	—	0.015	100K	5.6K	470	47K

VERSION	L841/L842 19-D	C843/C844 C845/C846	C842 19-E
B.E.EN	47u	1000P	0.01
OTHERS	B130/B131	——	——

➡ TAPE.PB/MAIN SIGNAL

⚠ Parts are safety assurance parts. When replacing those parts make sure to use the specified one.

■ Mic Input Amplifier Section

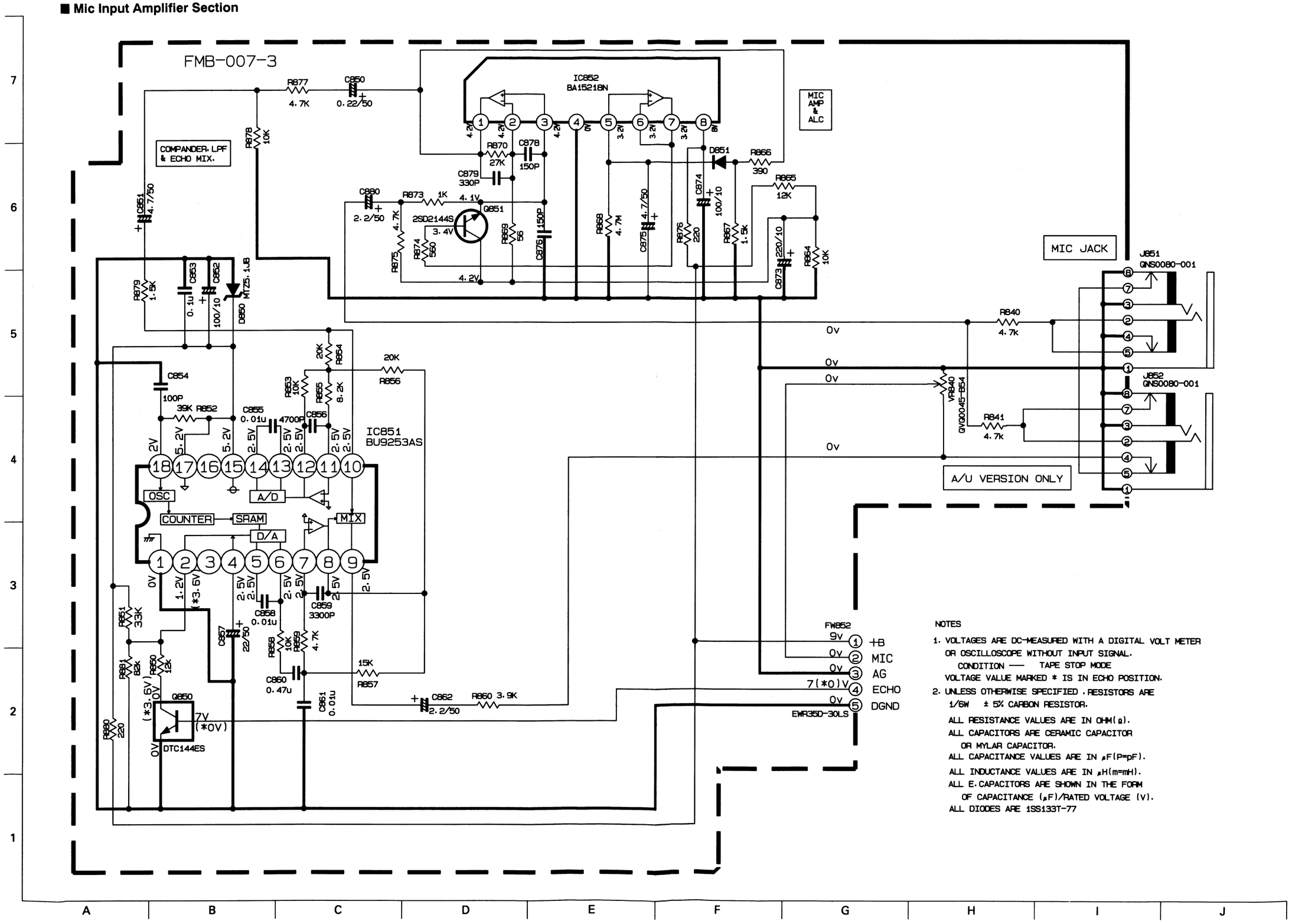

NOTES

1. VOLTAGES ARE DC-MEASURED WITH A DIGITAL VOLT METER OR OSCILLOSCOPE WITHOUT INPUT SIGNAL.
   CONDITION —— TAPE STOP MODE
   VOLTAGE VALUE MARKED * IS IN ECHO POSITION.
2. UNLESS OTHERWISE SPECIFIED, RESISTORS ARE 1/6W ± 5% CARBON RESISTOR.
   ALL RESISTANCE VALUES ARE IN OHM(Ω).
   ALL CAPACITORS ARE CERAMIC CAPACITOR OR MYLAR CAPACITOR.
   ALL CAPACITANCE VALUES ARE IN μF(P=pF).
   ALL INDUCTANCE VALUES ARE IN μH(m=mH).
   ALL E.CAPACITORS ARE SHOWN IN THE FORM OF CAPACITANCE (μF)/RATED VOLTAGE (V).
   ALL DIODES ARE 1SS133T-77

■ Power Transformer Section

POWER SUPPLY BLOCK

J/C — AC120V/60Hz

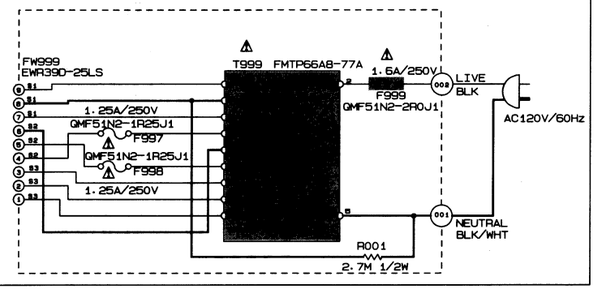

POWER SUPPLY BLOCK

E/EN — AC230/50Hz

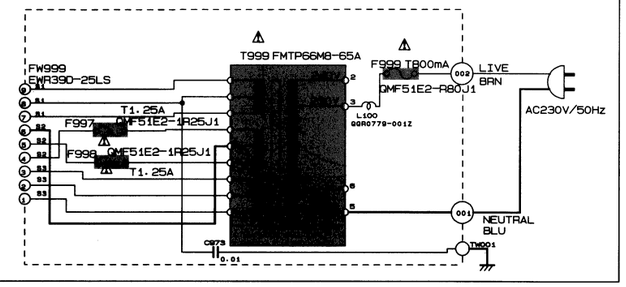

POWER SUPPLY BLOCK

B — AC230/50Hz

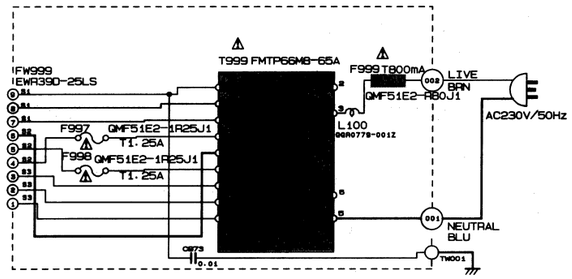

POWER SUPPLY BLOCK

EE — AC230/50Hz

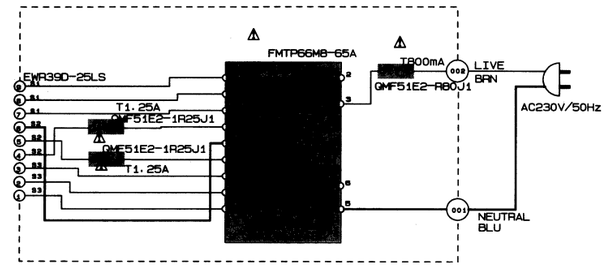

POWER SUPPLY BLOCK

U/UB/US/UT/UX/A — AC110/127/220/230 ~ 240V ~50/60Hz

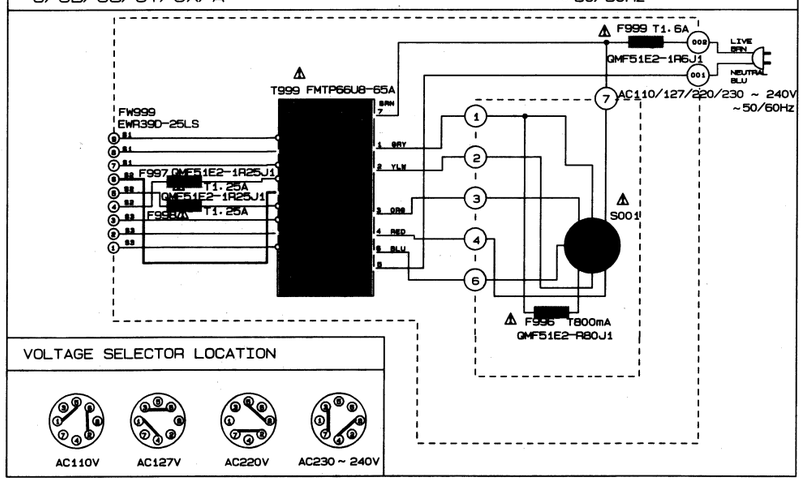

⚠ Parts are safety assurance parts. When replacing those parts make sure to use the specified one.

■ Main Amplifier Board

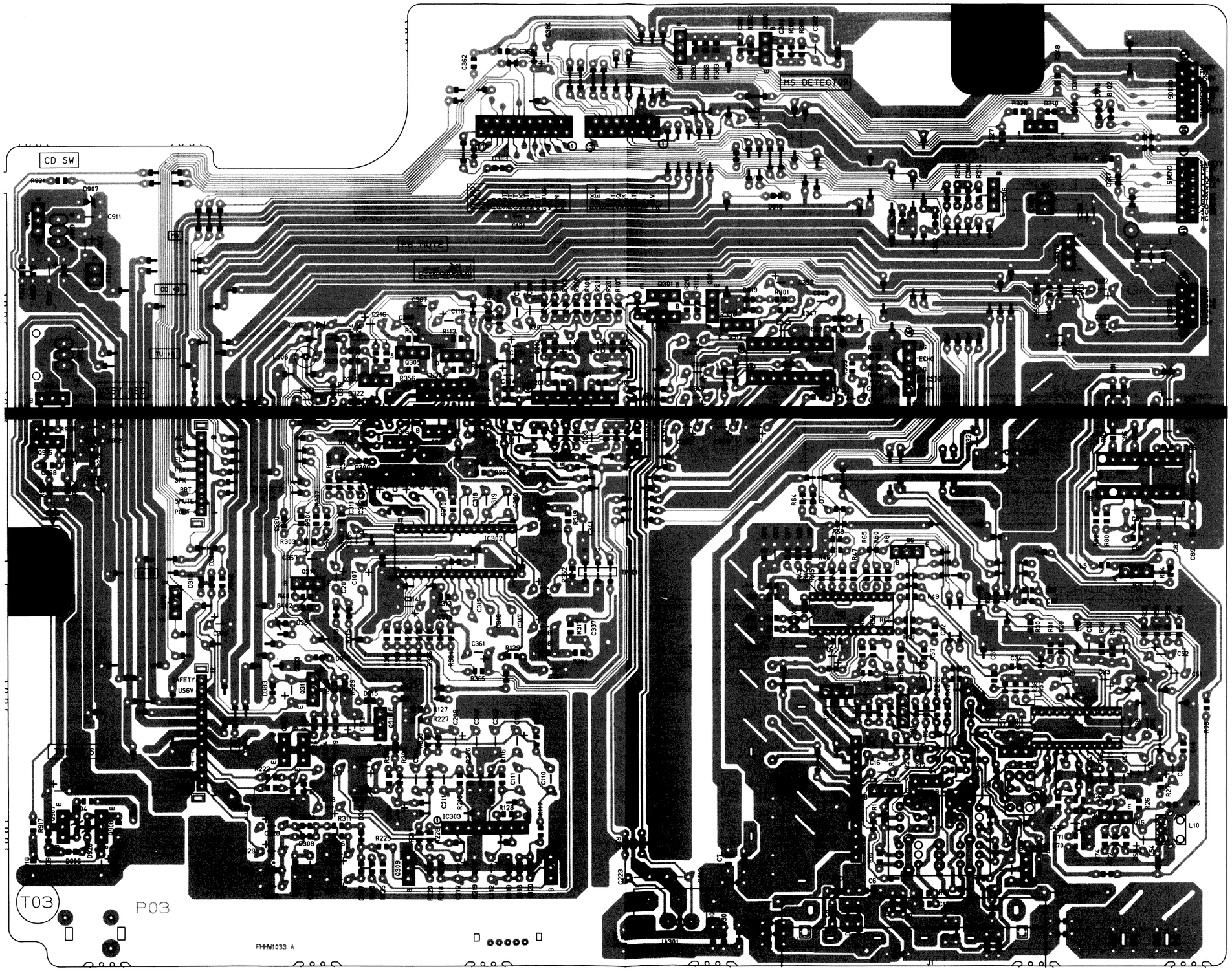

■ **Power Supply & Power Amplifier Board**

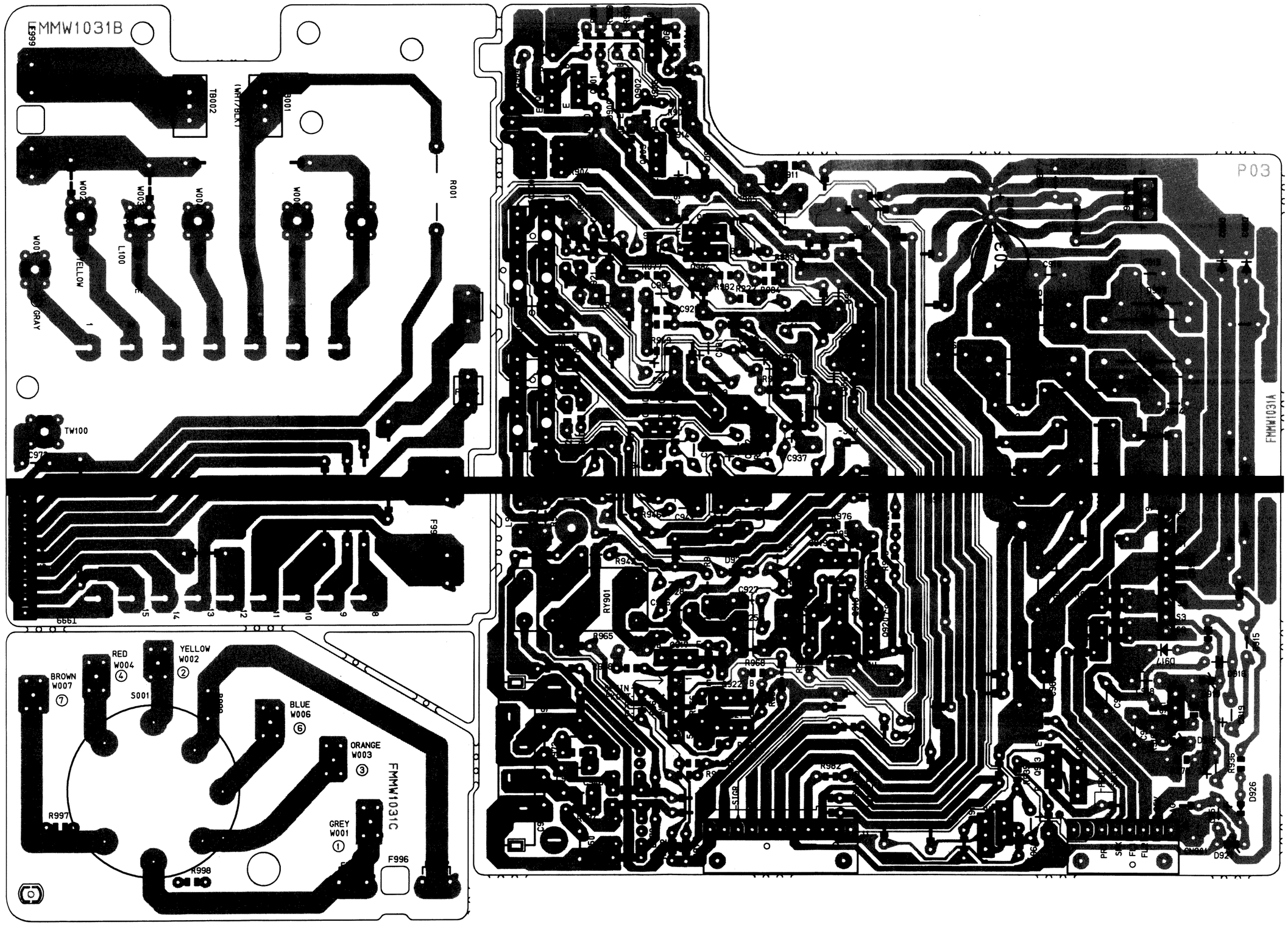

■ System CPU & Operation Switch Board

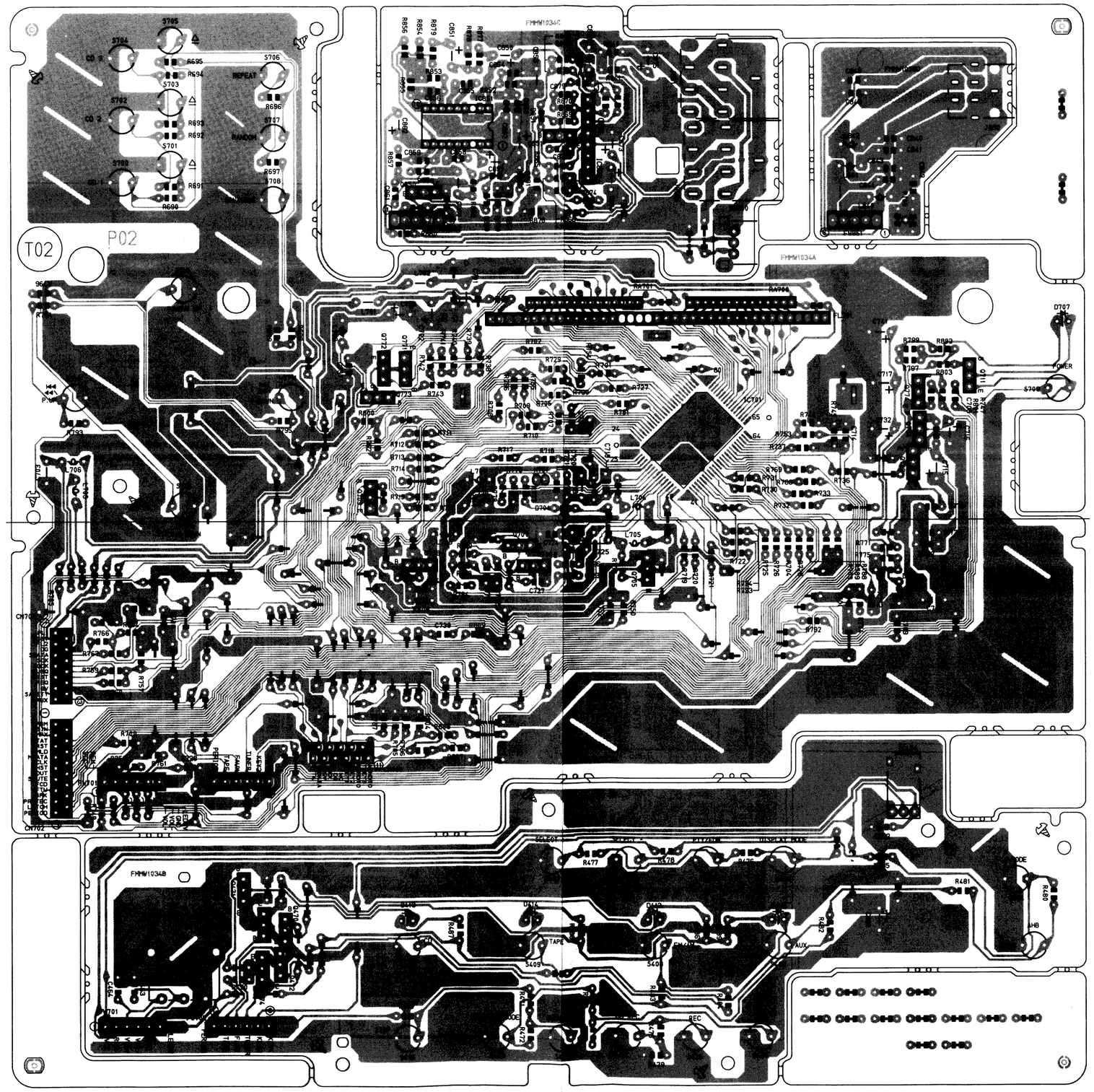

CA-D302T

■ Actuator Motor Board

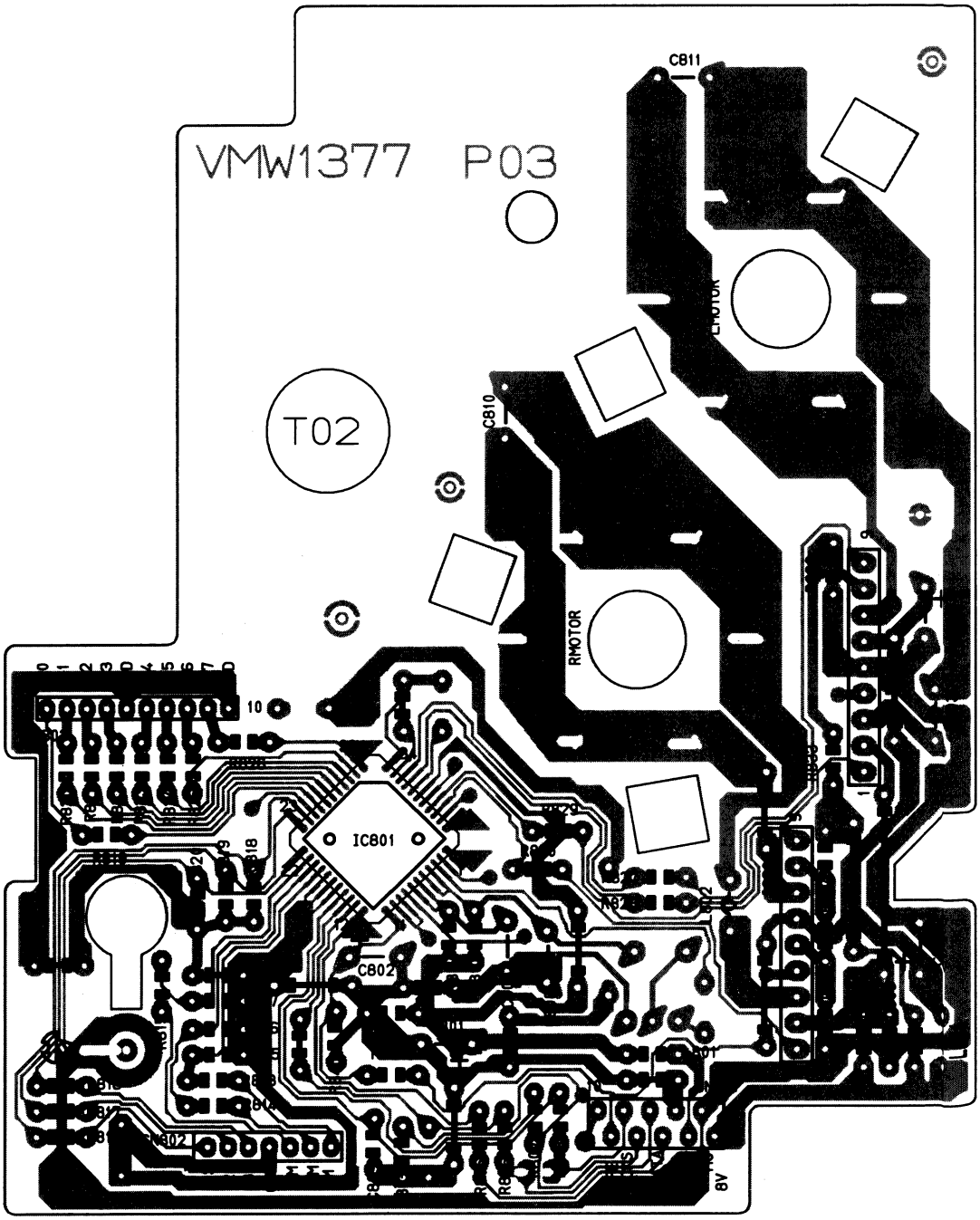

■ CD Servo Control Board

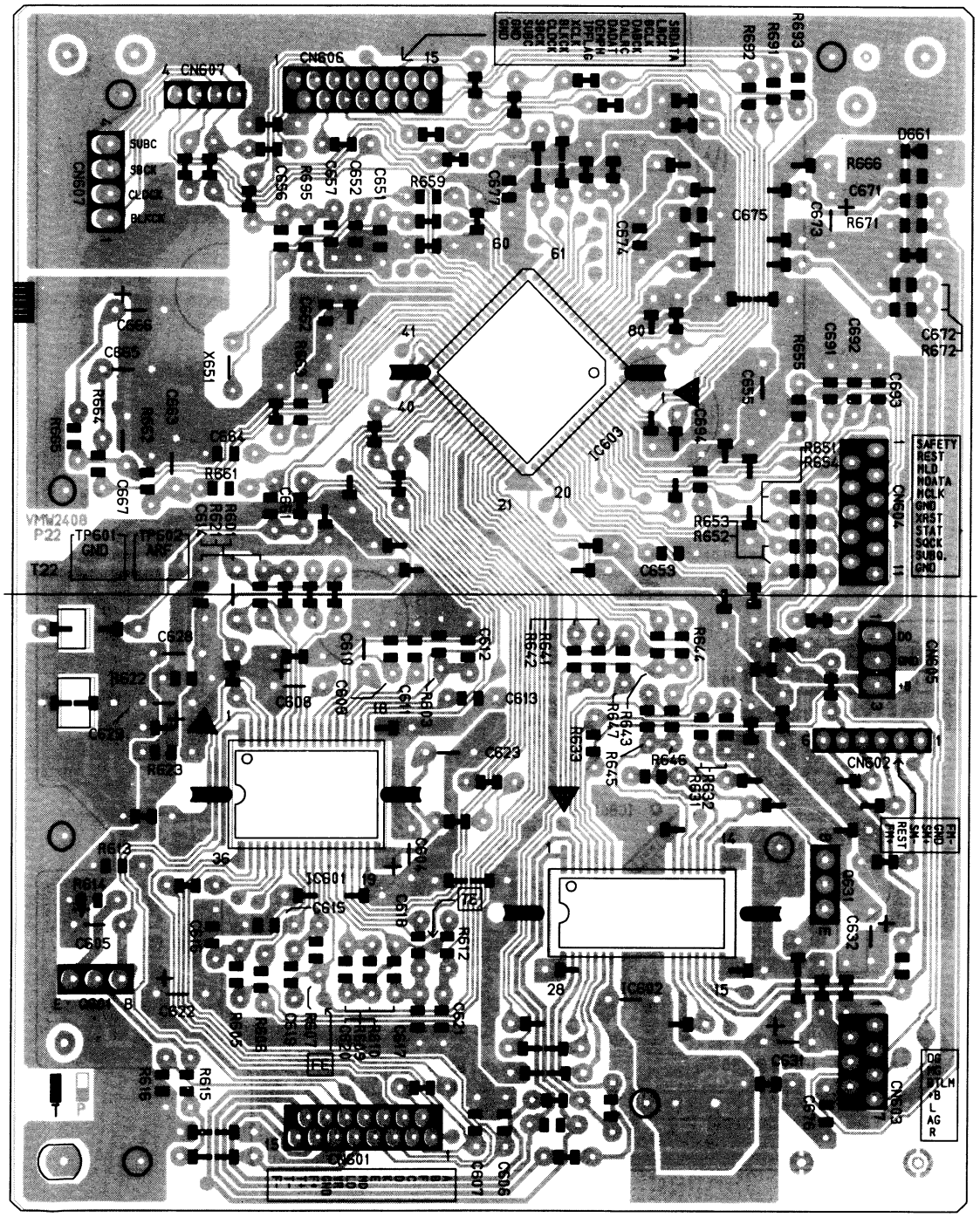

■ CD Tray Select Switch Board

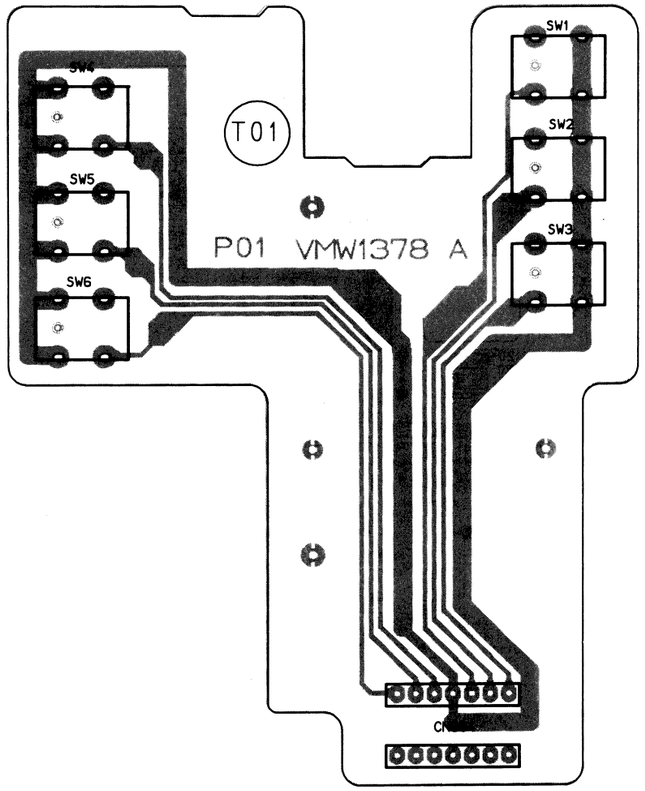

■ Cam Switch Board

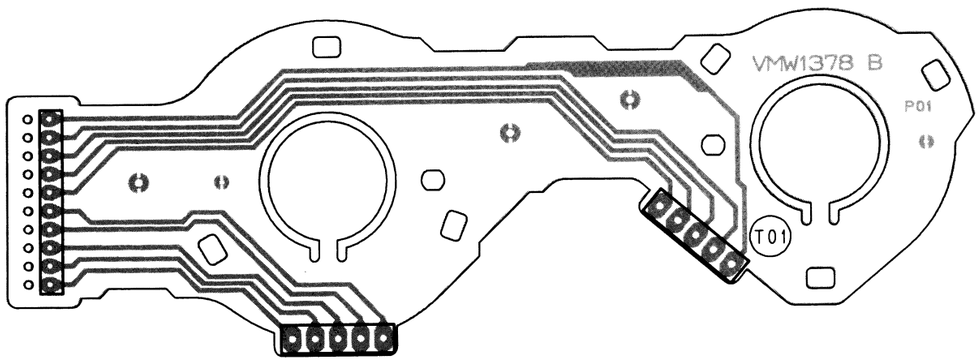

CA-D302T

■ **Head Amplifier & Mechanism Control Board**

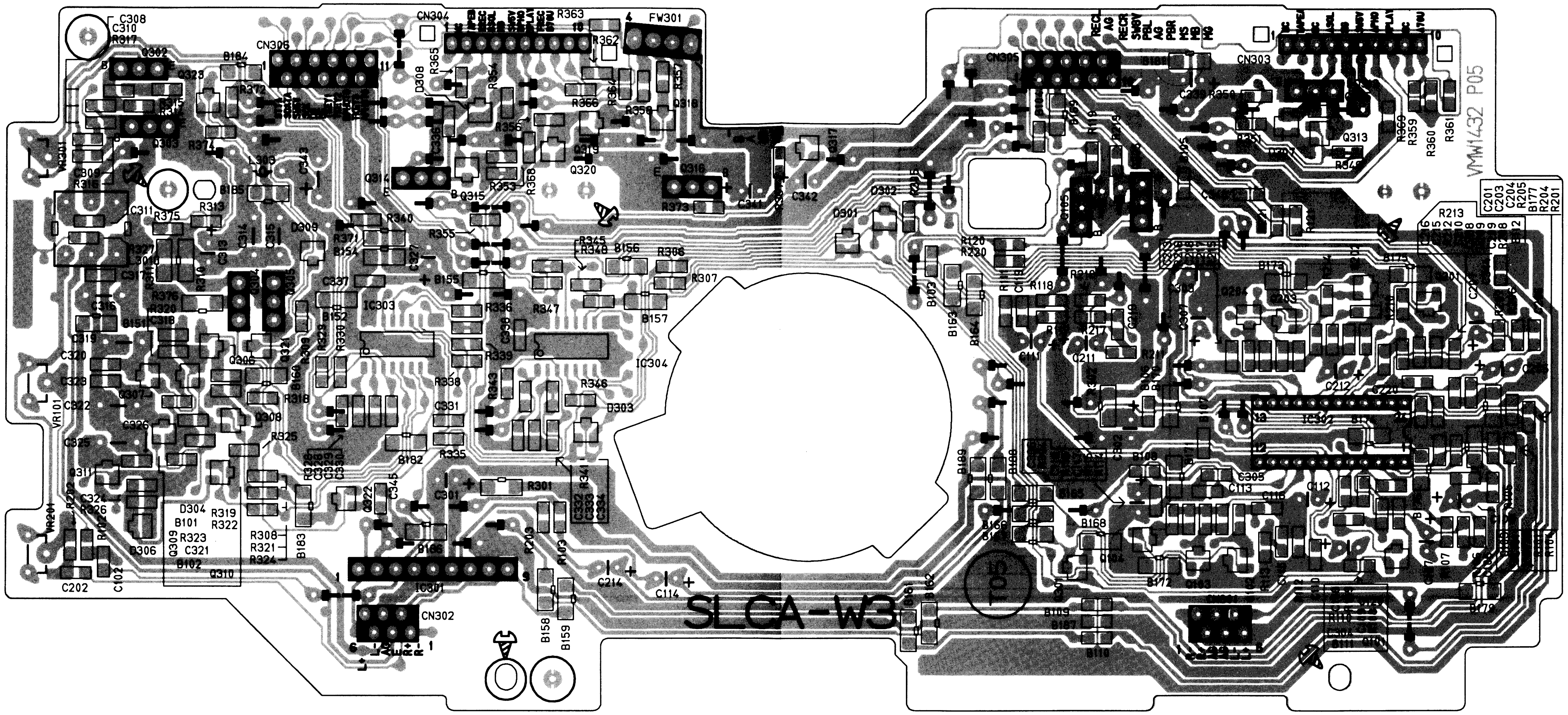

■ **Reel pulse Board**

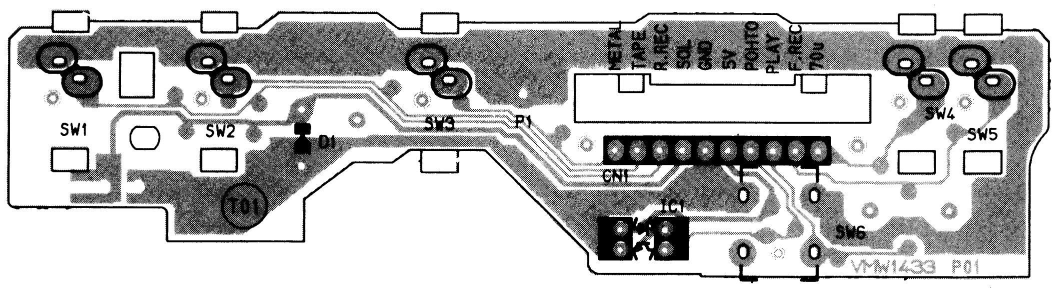

PARTS LIST

[MX-D302T]

UNIT No.CA-D302T
SP-D302(EXCEPT Ver.U,A type)
SP-D432(ONLY Ver.U,A type)

* All printed circuit boards and its assemblies are not available as service parts.

Area Suffix	
A	Australia
B	U.K
E	Continental Europe
EE	East Europe
EN	North Europe
U	Other Areas
US	Singapore
UT	Taiwan
UX	Saudi Arabia
J	U.S.A
C	Canada

- Contents -

General Exploded View and Parts List ---------- 3-3
Chenger Mechanism Ass'y and Parts list ---------- 3-6
CD Mechanism Ass'y and Parts list ---------- 3-8
Chassette Mechanism Ass'y and Parts list ---------- 3-9
Electrical Parts List ---------- 3-11
(Power Supply & Amplifier) ---------- 3-11
(Pre Amplifier & Tuner) ---------- 3-13
(System Micon & Operatio Switch) ---------- 3-18
(CD Servo Control) ---------- 3-21
(CD Select Switch) ---------- 3-22
(Chenger Control) ---------- 3-22
(Head Amplifier & Mechanism Control) ---------- 3-23
(Reel Pulse) ---------- 3-25
(Reel Pulse) ---------- 3-25
Accessories and Packing Materials and Parts List ---------- 3-26

General Exploded View and Parts List

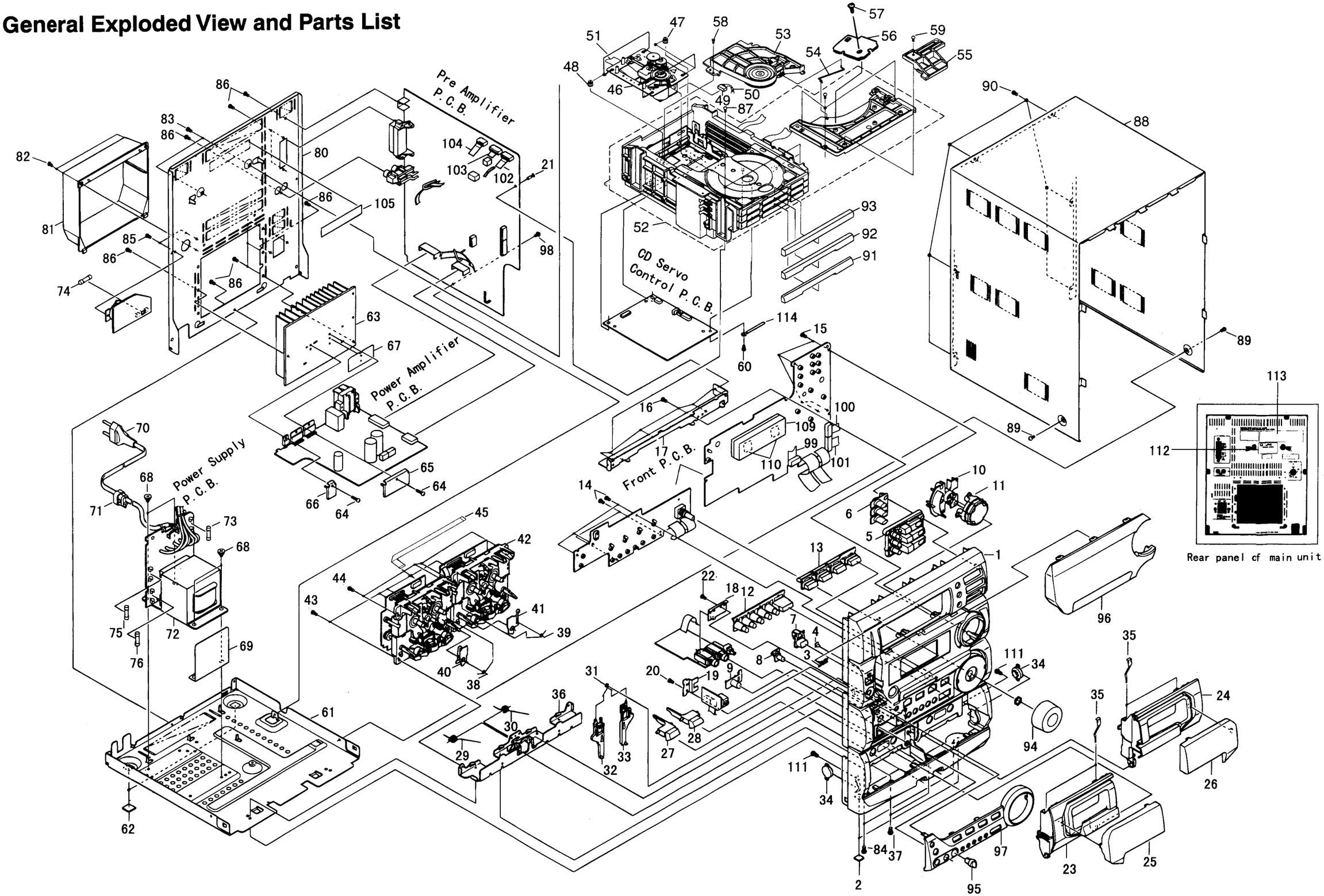

BLOCK NO. M1MM

⚠	REF.	PARTS NO.	PARTS NAME	REMARKS	QTY	SUFFIX	CLR
	1	GV10001-001AKP	FRONT PANEL		1	C,J	
		GV10001-002AKP	FRONT PANEL		1	B,E,EE,EN	
		GV10001-003AKP	FRONT PANEL		1	A,U,UB,US,UT	
	2	E75896-001	SPACER		2		
	3	E406971-001SM	JVC MARK		1		
	4	GV40003-001AKP	STBY.INDICATOR		1		
	5	GV20009-001AKP	CD BUTTON		1		
	6	GV30008-001AKP	DISC BUTTON	ATTACH TO CD BT	1		
	7	GV30010-001AKP	POWER BUTTON	ON/STANDBY MARK	1	C,J	
		GV30010-002AKP	POWER BUTTON	ON/STANDBY MARK	1	B,E,EN,EE,A	
		GV30010-002AKP	POWER BUTTON	ON/STANDBY MARK	1	U,UB,	
		GV30010-002AKP	POWER BUTTON	ON/STANDBY MARK	1	US,UT,UX	
	8	GV30016-001AKP	PUSH BUTTON		1		
	9	GV30017-001AKP	PUSH BUTTON		1		
	10	GV20008-004AKP	SOUND BUTTON		1	B,E,EE,EN	
		GV20008-004AKP	SOUND BUTTON		1	C,J	
		GV20008-005AKP	SOUND BUTTON		1	A,U,UB,US	
		GV20008-005AKP	SOUND BUTTON		1	UT,UX	
	11	GV30018-001AKP	SERCH BTN.ASSY		1		
	12	GV30009-001AKP	CONTROL BUTTON		1		
	13	GV30013-001AKP	SOURCE BUTTON		1		
	14	SDSF2608Z	SCREW	SWITCH BOARD	5		
	15	SDSF2608Z	SCREW	MICOM BOARD	4		
	16	SDSF2608Z	SCREW	STY.BKT+F.PANEL	6		
	17	GV30003-001AKP	STAY BRACKET		1		
	18	GV40004-001AKP	MIC BRACKET		1	US,UT,UX	
		GV40004-001AKP	MIC BRACKET		1	A,U,UB	
	19	GV40001-001AKP	H.P BRACKET		1		
	20	SDSF2608Z	SCREW	H.P BKT.+F.PANE	1		
	21	FMYH4004-001	PLASTIC RIVET	MAIN BOARD&BKT.	1		
	22	SDSF2608Z	SCREW	MICBKT.+F.PANEL	1	US,UT,UX	
		SDSF2608Z	SCREW	MICBKT.+F.PANEL	1	A,U,UB	
	23	GV20001-004AKP	CASS HOLDER (L)		1	B,E,EE,EN	
		GV20001-005AKP	CASS HOLDER (L)		1	A,U,UB,US	
		GV20001-005AKP	CASS HOLDER (L)		1	UT,UX	
		GV20001-004AKP	CASS HOLDER (L)		1	C,J	
	24	GV20002-004AKP	CASS HOLDER(R)		1	B,E,EE,EN	
		GV20002-004AKP	CASS HOLDER(R)		1	C,J	
		GV20002-005AKP	CASS HOLDER(R)		1	A,U,UB,US	
		GV20002-005AKP	CASS HOLDER(R)		1	UT,UX	
	25	GV20003-001AKP	CASS LENS (L)		1		
	26	GV20004-001AKP	CASS LENS (R)		1		
	27	GV30014-004AKP	EJECT BUTTON(A)		1		
	28	GV30015-004AKP	EJECT BUTTON(B)		1		
	29	FMKW4009-001	HOLDER SPRING A		1		
	30	FMKW4010-001	HOLDER SPRING B		1		
	31	FMKW4011-001	SPRING	FOR EJECT LEVER	1		
	32	FMKS3002-002KP	EJECT LEVER (A)		1		
	33	FMKS3003-002KP	EJECT LEVER (B)		1		
	34	VYH7779-00B	DUMPER ASS'Y		2		
	35	VKY4180-001	CASSETTE SPRING		4		
	36	FMKL2002-001	HOLDER BRACKET		1		
	37	SBSG3010Z	T.SCREW	F.P.TO H.BRKT.	2		
	38	FMKW4007-001	SPRING (A)	EJECT SAFETY A	2		
	39	FMKW4008-001	SPRING (B)	EJECT SAFETY B	1		

BLOCK NO. M1MM

⚠	REF.	PARTS NO.	PARTS NAME	REMARKS	QTY	SUFFIX	CLR
	40	FMKL4012-003	EJECT SAFETY(A)		1		
	41	FMKL4013-001	EJECT SAFETY(B)		1		
	42	---------	CASSETTE MECAH		1		
	43	SBSG3010Z	T.SCREW	MECHA & H.BRKT.	4		
	44	SBSF3010Z	SCREW	MECHA & F.PANEL	4		
	45	VWF1210-25TTB	CARD WIRE		1		
	46	----------	CD MECHA		1		
	47	FMYH4003-002	INSULATOR		2		
	48	FMYH4003-001	INSULATOR		2		
	49	VDM1001-M001A	WIRE&TUBE		1		
	50	VYSA1R2-033	SPACER		1		
	51	QUQ110-1509AJ	FLAT WIRE		1		
	52	----------	CD CHENGER MECH		2		
	53	VKS3703-00FMM	CLAMPER ASS'Y		1		
	54	VKW5187-001	ROD		1		
	55	E309662-001	DISC STOPPER		1		
	56	FMKL4008-001	ROD STOPPER	FOR C,J VERSON	1	C,J	
	57	SBSF3008Z	SCREW	FOR LOD STOPPER	1	C,J	
	58	SPST2606Z	SCREW	FOR CLAMPER ASS	1		
	59	SBSF3008Z	SCREW	FOR DISC STOPPE	1		
	60	SBSF3008Z	SCREW	C3 BOARD& CASIN	1		
	61	GV10003-001AKP	CHASSIS BASE		1		
	62	E75896-006	FELT SPACER	CHAS.BASE FOOT	2		
	63	GV30007-001AKP	HEAT SINK		1		
	64	SBSG3014CC	T.SCREW		2		
	65	FMKL4007-001	BRACKET		1		
	66	FMKL4015-001	BRACKET		1		
	67	FMPK4003-001	MICA SHEET		1		
	68	E65389-002	SPECIAL SCREW		4		
	69	FMMA4003-001	TRANS.SHIELD		1		
	70	QMPG020-244-JC	POWER CORD		1	A	
		QMPN090-200-JC	POWER CORD		1	B,UB	
		QMP1480-200L	POWER CORD		1	C,J	
		QMP39E0-200	POWER CORD		1	E,EE,EN,U,US	
		QMP39E0-200	POWER CORD		1	US	
		QMP7520-200	POWER CORD		1	UT,UX	
	71	QHS3771-108	CORD STOPPER		1		
	72	FMTP66A8-77A	TRANSFORMER	T999	1	C,J	
		FMTP66M8-65A	TRANSFORMER	T999	1	B,E,EE,EN	
		FMTP66U8-65A	TRANSFORMER	T999	1	US,UT,UX	
		FMTP66U8-65A	TRANSFORMER	T999	1	A,U,UB	
	73	QMF51E2-R80SBS	FUSE	F999	1	E,EE,EN,B	
		QMF51E2-1R6J1	FUSE	F999	1	A,U,UB	
		QMF51E2-1R6J1	FUSE	F999	1	US,UT,UX	
		QMF51N2-2R0J1	FUSE	F999	1	C,J	
	74	QMF51E2-R80SBS	FUSE	F996	1	A,U,UB	
		QMF51E2-R80SBS	FUSE	F996	1	US,UT,UX	
	75	QMF51N2-1R25J1	FUSE	F997	1	C,J	
		QMF51E2-1R25	FUSE	F997	1	A,B,E,EE,EN	
		QMF51E2-1R25	FUSE	F997	1	UT,UX	
		QMF51E2-1R25	FUSE	F997	1	U,UB,US	
	76	QMF51N2-1R25J1	FUSE	F998	1	C,J	
		QMF51E2-1R25	FUSE	F998	1	UT,UX	
		QMF51E2-1R25	FUSE	F998	1	U,UB,US	

BLOCK NO. M1MM

⚠	REF.	PARTS NO.	PARTS NAME	REMARKS	QTY	SUFFIX	CLR
		QMF51E2-1R25	FUSE	F998	1	U,UB,US	
	80	GV10004-004AKP	REAR PANEL		1	EE	
		GV10004-001AKP	REAR PANEL		1	C,J	
		GV10004-002AKP	REAR PANEL		1	A,U,UB,US,UX	
		GV10004-005AKP	REAR PANEL		1	UT	
		GV10004-003AKP	REAR PANEL		1	B,E,EN	
	81	E207356-001SM	REAR COVER		1	A,B,E,EE,EN	
		E207356-001SM	REAR COVER		1	U,UB,US	
		E207356-001SM	REAR COVER		1	UT,UX	
		E207356-002SM	REAR COVER		1	C,J	
	82	E73273-003	SPECIAL SCREW	R.COVER/R.PANEL	2		
	83	E73273-003	SPECIAL SCREW	C3 / REAR PANEL	2		
	84	SBSG3010Z	T.SCREW	F.P.TO CHS.BASE	2		
	85	E73273-003	SPECIAL SCREW	VOL.SEL/R.PANEL	2	A,U,UB	
		E73273-003	SPECIAL SCREW	VOL.SEL/R.PANEL	2	US,UT,UX	
	86	E73273-003	SPECIAL SCREW	ANTENA/ R.PANEL	2		
		E73273-003	SPECIAL SCREW	SPK.TEM./R.PANE	2		
		E73273-003	SPECIAL SCREW	AUX/REAR PANEL	1		
		E73273-003	SPECIAL SCREW	E.PLATE/R.PANEL	1		
		E73273-003	SPECIAL SCREW	R.PANEL/ C.BASE	1		
		E73273-003	SPECIAL SCREW	H.SINK/ R.PANEL	4		
	87	SBST3008Z	TH TAP SCREW	C3 & STAY BRKT.	2		
	88	GV10002-010A(S)	METAL COVER		1	A,U,UB	
		GV10002-010A(S)	METAL COVER		1	US,UT,UX	
		GV10002-012A(S)	METAL COVER		1	C,J,B,E,EE,E	
	89	SBSB3006M	T.SCREW		2		
	90	E73273-003	SPECIAL SCREW		6		
	91	E209153-001SM	FITTING	DISC 1	1		
	92	E209155-001SM	FITTING	DISC 2	1		
	93	E209157-001SM	FITIING	DISC 3	1		
	94	E310080-230SMKP	M.VOL.KNOB		1		
	95	E408765-006SMKP	MIC KNOB		1	US,UT,UX	
		E408765-006SMKP	MIC KNOB		1	A,U,UB	
	96	GV20005-001AKP	WINDOW SCREEN		1		
	97	GV20007-002AKP	ORNAMENT		1	U,UB,US	
		GV20007-002AKP	ORNAMENT		1	A,B,E,EE,EN	
		GV20007-002AKP	ORNAMENT		1	UT,UX	
		GV20007-001AKP	ORNAMENT		1	C,J	
	98	GBST3006Z	SCREW	M.BOARD & C.BAS	1		
	99	VWF1211-12TTB	CARD WIRE		1		
	100	VWF1213-12TTBW	CARD WIRE		1		
	101	VWF1217-12TTBW	CARD WIRE		1		
	102	VWF1210-30TTB	CARD WIRE		1		
	103	VWF1211-30TTB	CARD WIRE		1		
	104	VWF1207-30TTB	CARD WIRE		1		
	105	E406709-001	LASER CAUTION		1	A,B,E,EE,EN	
		E406709-001	LASER CAUTION		1	U,UB,US,UT,U	
	109	GV30004-001AKP	FL HOLDER		1		
	110	E3400-439	FELT SPACER		2		
	111	SDSF2608Z	SCREW		2		
	112	GV30020-001A	RATING LABEL	FOR UT VER.ONLY	2	UT	
	113	FMND3008-007	RATING LABEL	FOR UX VER.ONLY	1	UX	
	114	VKZ4001-110	WIRE HOLDER		1		

CD Changer Mechanism Ass'y and Parts List

■ Grease Point

Block No. M 2 M M

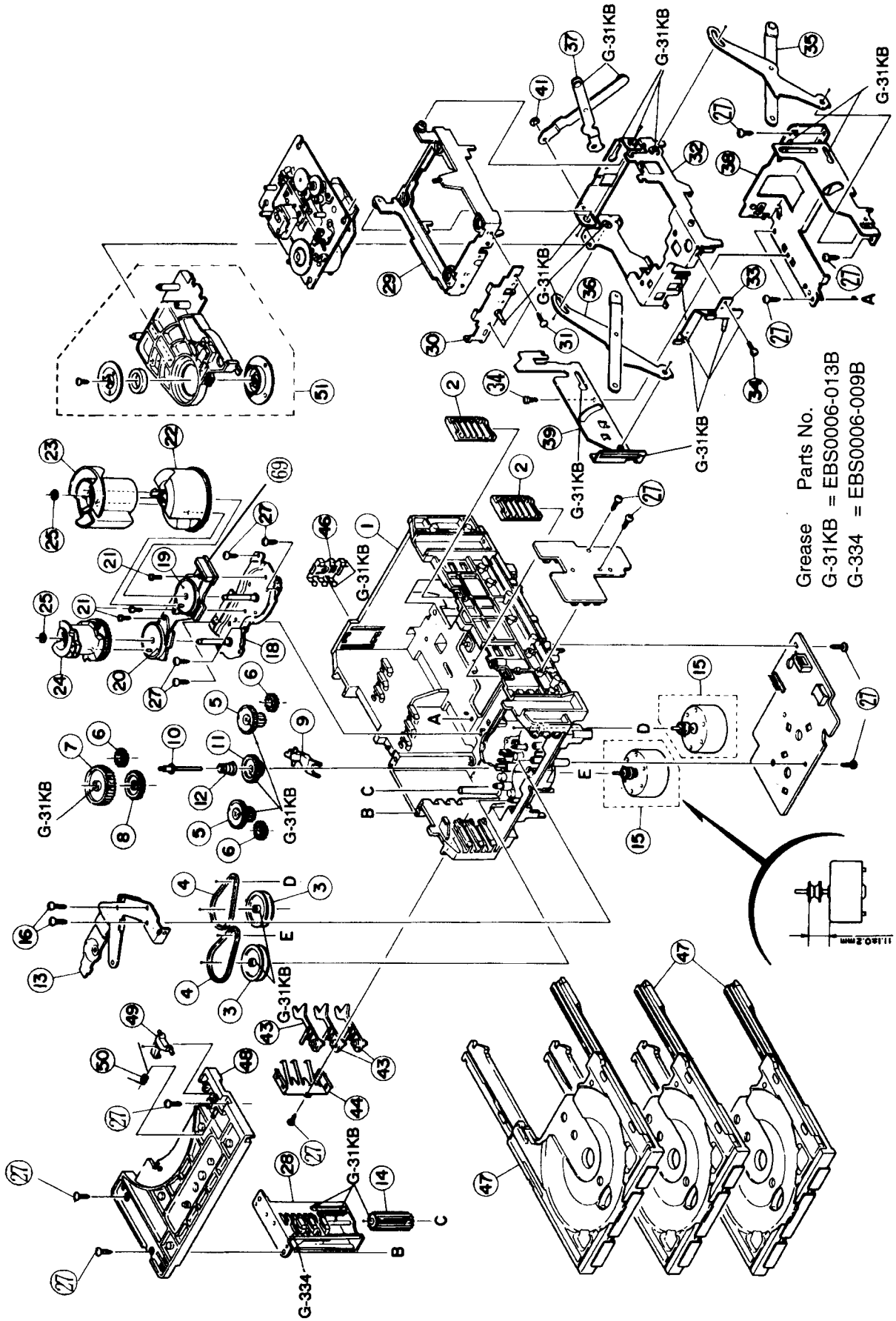

■ Parts List (Changer Mechanism Ass'y) Block No. M2MM

⚠	Item	Parts Number	Parts Name	Q'ty	Description	Area
	1	VKS1144-003	CHASSIS BASE	1		
	2	VKS3698-003	TRAY GUIDE	2		
	3	VKS5532-003	PULLEY GEAR	2		
	4	VKB3000-164	DRIVE BELT	2		
	5	VKS5505-003	GEAR B	2		
	6	VKS5506-002	GEAR C	3		
	7	VKS5507-002	CROSS GEAR U	1		
	8	VKS5508-002	CROSS GEAR L	1		
	9	VKS5510-003	SELECT LEVER	1		
	10	VKH5769-001	GEAR STUD	1		
	11	VKS5511-002	SELECT GEAR	1		
	12	VKW5155-003	COMPRESS SPRING	1		
	13	VKM3846-002	GEAR BRACKET	1		
	14	VKS5509-002MM	CYLINDER GEAR	1		
	15	MSN5D257A-SA2	DC MOTOR	2		
	16	DPSP2616Z	SCREW	2		
	18	VKM3825-00AMM	CAM GEAR ASSY	1		
	19	VKZ3172-00A	CAM SW. R ASS'Y	1		
	20	VKZ3173-00A	CAM SW. L ASS'Y	1		
	21	SPST2606Z	TAPPING SCREW	3		
	22	VKS2263-002MM	CAM R1	1		
	23	VKS2264-002MM	CAM R2	1		
	24	VKS2265-002MM	CAM GEAR L	1		
	25	WDL316050	SLIT WASHER	2		
	27	SBSF2608Z	TAPPING SCREW	16		
	28	VKS3702-00FMM	DRIVE UNIT	1		
	29	VKS2247-004	MECHA HOLDER A	1		
	30	VKL7767-00B	MECHABRACKET	1		
	31	SBSF2606Z	TAPPING SCREW	2		
	32	VKM3860-00A	MECHA HOLDER ASSY	1		
	33	VKL7802-00C	MECHA HOLDER ASSY	1		
	34	SDST2604Z	SCREW	3		
	35	VKL7810-00A	LIFTER	1		
	36	VKL7811-00A	LIFTER	1		
	37	VKL7812-00A	LIFTER	1		
	38	VKL2732-002	LIFTER BASE	1		
	39	VKM3823-001	LIFTER BRACKET	1		
	41	WDL266035-2	SLIT WASHER	1		
	43	VKS5514-002MM	LOCK LEVER	3		
	44	VKY3133-002MM	RETURN SPRING	1		
	46	VKY3134-003MM	CLICK SPRING	1		
	47	VKS2252-00DMM	TRAY ASS'Y	3		
	48	VKS2250-003	TOP BRACKET	1		
	49	VKS5515-002	S.TRAY STOPPER	1		
	50	VKW5156-004	TORSION SPRING	1		
	51	VKS3703-00FMMKP	CLAMPER ASS'Y	1		
	69	VMC0325-010	CONNECTOR	1		

CD Mechanism Ass'y and Parts List

■ Grease Point

Block No. M 3 M M

FOR JEM

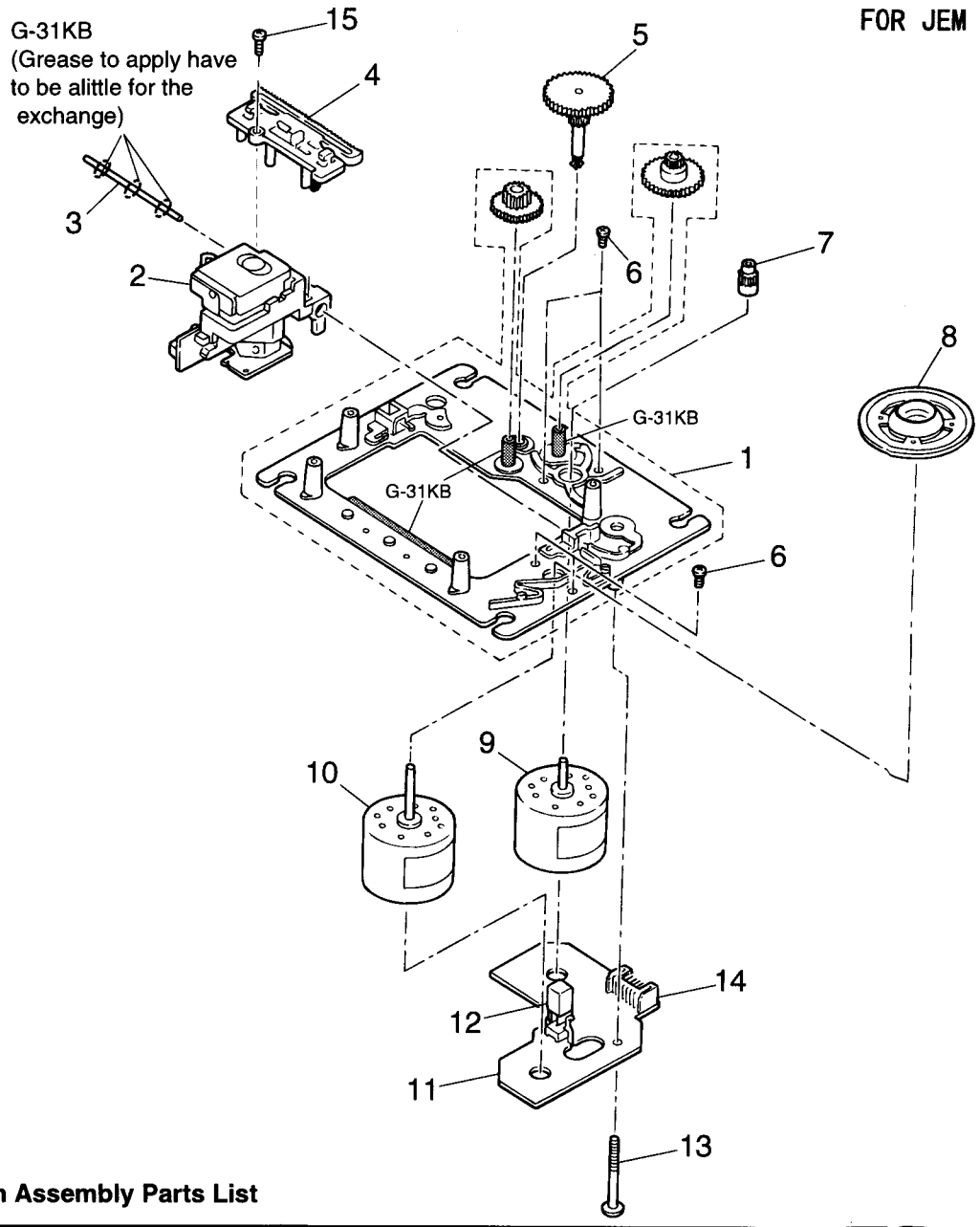

■CD Mechanism Assembly Parts List

⚠	Item	Parts Number	Parts Name	Q'ty	Description	Area
	1	EPB-002PK	MECHA. BASE ASSY	1		
	2	OPTIMA-150S	OPTICAL PICK UP	1		
	3	E407782-001	CD SHAFT	1		
	4	E307746-001	CD RACK	1		
	5	EPB-003A	MECHA GEAR	1		
	6	SDSP2003N	SCREW	4		
	7	E406750-001	PINION GEAR	1		
	8	EPB309173A	TURN TABLE	1		
	9	E406784-001	FEED MOTOR	1		
	10	E406783-001	SPINDLE MOTOR	1		
	11	EMW10190-001(S)	P.C.BOARD	1		
	12	ESB1100-005	LEAF SWITCH	1		
	13	E75832-001	SCREW	1		
	14	EMV5109-006B	CONN. TERMINAL	1	6PIN	
	15	SDSF2006Z	SCREW	1		

■ Cassette Mechanism Parts List

Block NO. M4MM

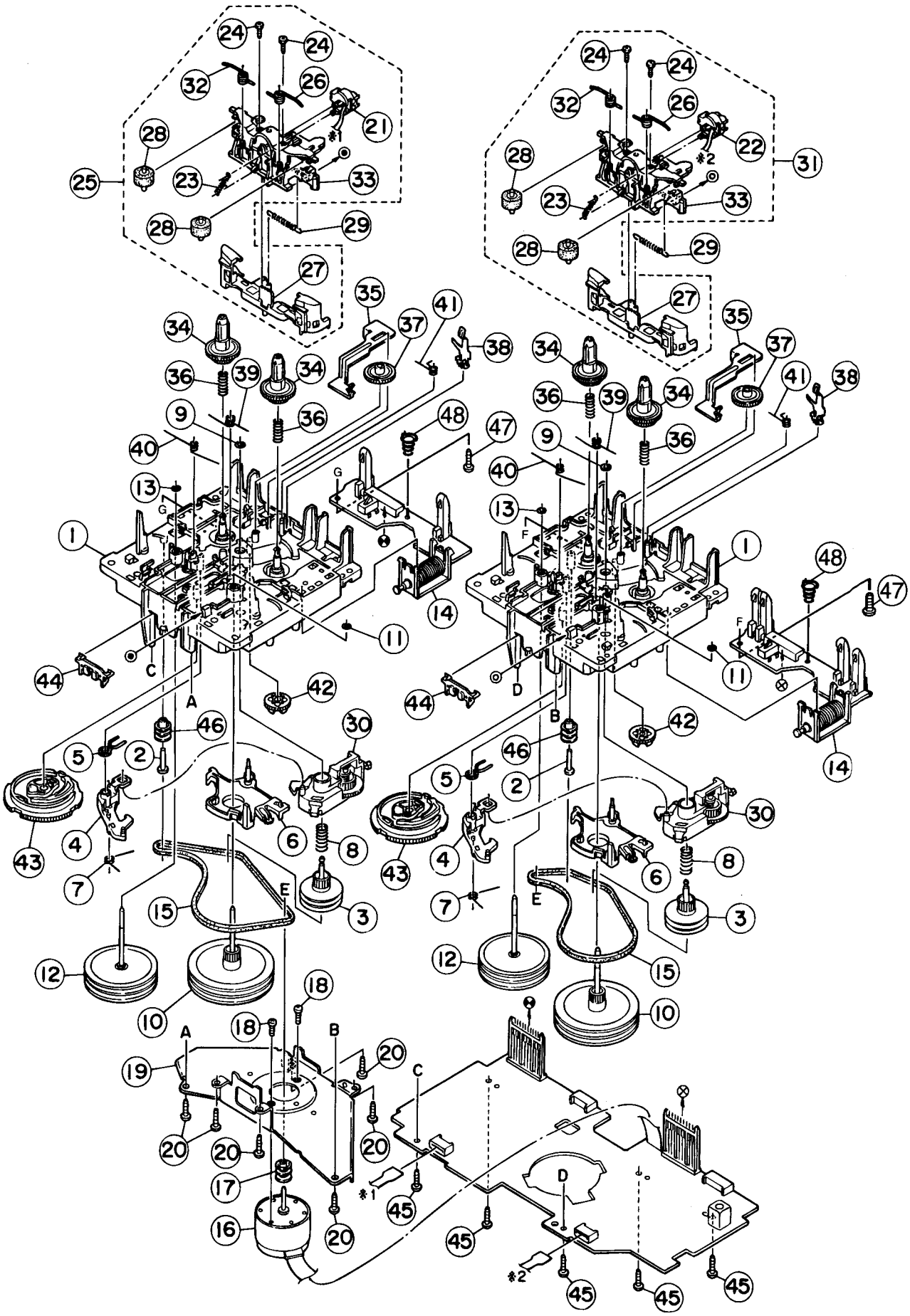

■ Parts List (Cassette Mechanism Ass'y)

Block No. M4MM

⚠	Item	Parts Number	Parts Name	Q'ty	Description	Area
	1	VKS1165-00F	CHASSIS B.ASSY	2		
	2	VKH5786-002	SHAFT	2		
	3	VKR3199-002	MAIN PULLEY	2		
	4	VKS3785-001MM	FM ARM	2		
	5	VKW5284-002	SWING SPRING	2		
	6	VKS2278-001	TRIGGER ARM	2		
	7	VKW5301-001	FR SPRING	2		
	8	VKW5266-001	ELEVATOR SPRING	2		
	9	WDL214025	WASHER	2		
	10	VKF3205-00B	F.WHEEL ASSY(R)	2		
	11	WDL183425	SLIT WASHER	2		
	12	VKF3207-00B	F.WHEEL ASSY(L)	2		
	13	WDL173525-6	SLIT WASHER	2		
	14	VGP2401-00A	DC SOLENOID	2		
	15	VKB3000-174	CAPSTAN BELT(B)	2		
	16	MSI 5U2LWA	DCMOTOR	1		
	17	VKR4761-001	MOTOR PULLEY	1		
	18	QYSPSP2604Z	SCREW	2		
	19	VKM3907-001	JOINT BRACKET	1		
	20	QYSBSF2608Z	T.SCREW	6		
	21	VGH0424-037	P.B.HEAD	1		
	22	VGH0425-544	R/P&E HEAD	1		
	23	VKW5302-001	HEAD SPRING	2		
	24	VKZ4730-001	SPECIAL SCREW	4		
	25	VKS2279-00C	HEAD MOUNT ASS'Y	1		
	26	VKW5299-001	PIN.ROL.SP.(R)	2		
	27	VKS2277-005	DIRECTION LEVER	2		
	28	VKP4233-00A	PINCH ROL.ASSY	4		
	29	VKW5285-001	RETURN SPRING	2		
	30	VKS3786-00E	CLUTCH ASSY	2		
	31	VKS2275-00C	HEAD MOUNT ASSY	1		
	32	VKW5300-001	PIN.ROL.SP.(L)	2		
	33	VKS1167-001	HEAD MOUNT BASE	2		
	34	VKS2274-002	REEL GEAR	4		
	35	VKM3906-002	PLAY SE.LEVER	2		
	36	VKW5286-002	B.T.SPRING	4		
	37	VKS5559-001	PLAY IDLE GEAR	2		
	38	VKY3149-001	CASSETTE SP.	2		
	39	VKW5279-001	HEAD BASE SP(R)	2		
	40	VKW5280-001	HEAD BASE SP(L)	2		
	41	VKW5296-001	EARTH SPRING	2		
	42	VKS5560-001	FR IDLE GEAR	2		
	43	VKS1166-003	CONTROL CAM	2		
	44	VKS5577-001	FPC HOLDER	2		
	45	QYSBSF2608Z	SCREW	5		
	46	VKR4749-002	IDLE PULLEY	2		
	47	QYSBSF2006Z	SCREW	2		
	48	LV40450-001A	CONNECT SPRING	2		

■ Electrical Parts List (Power Supply & Amplifier)

BLOCK NO. 01

⚠	REF.	PARTS NO.	PARTS NAME	REMARKS	SUFFIX
	C 900	QETM1HM-228	E CAPACITOR	2200MF 20% 50V	
	C 901	QETM1HM-228	E CAPACITOR	2200MF 20% 50V	
	C 902	QETM1HM-228	E CAPACITOR	2200MF 20% 50V	
	C 904	QCBB1HK-221Y	C.CAPACITOR	220PF 10% 50V	
	C 905	QET41CM-106	E CAPACITOR	10MF 20% 16V	
	C 906	QETN1HM-225Z	E CAPACITOR	2.2MF 20% 50V	
	C 907	QET41CM-226	E CAPACITOR	22MF 20% 16V	
	C 913	QFLC1HJ-683ZM	M CAPACITOR	.068MF 5% 50V	
	C 914	QFLC1HJ-683ZM	M CAPACITOR	.068MF 5% 50V	
	C 915	QFLC1HJ-683ZM	M CAPACITOR	.068MF 5% 50V	
	C 916	QFLC1HJ-683ZM	M CAPACITOR	.068MF 5% 50V	
	C 917	QETN1JM-476Z	E CAPACITOR	47MF 20% 63V	
	C 918	QET41HM-226	E CAPACITOR	22MF 20% 50V	
	C 919	QETB1JM-107	E CAPACITOR	100MF 20% 63V	
	C 920	QFLC1HJ-683ZM	M CAPACITOR	.068MF 5% 50V	
	C 922	QET41HM-226	E CAPACITOR	22MF 20% 50V	
	C 923	QCVB1CN-103Y	C CAPACITOR	.010MF 30% 16V	
	C 924	QET41HM-475	E CAPACITOR	4.7MF 20% 50V	
	C 925	QFV41HJ-104ZM	TF CAPACITOR	.10MF 5% 50V	
	C 926	QFV41HJ-104ZM	TF CAPACITOR	.10MF 5% 50V	
	C 927	QFV41HJ-104ZM	TF CAPACITOR	.10MF 5% 50V	
	C 928	QFV41HJ-104ZM	TF CAPACITOR	.10MF 5% 50V	
	C 929	QCS11HJ-100	C.CAPACITOR	10PF 5% 50V	
	C 930	QCS11HJ-100	C.CAPACITOR	10PF 5% 50V	
	C 931	QET41HM-476	E CAPACITOR	47MF 20% 50V	
	C 932	QET41HM-476	E CAPACITOR	47MF 20% 50V	
	C 933	QCBB1HK-101Y	C.CAPACITOR	100PF 10% 50V	
	C 934	QCBB1HK-101Y	C.CAPACITOR	100PF 10% 50V	
	C 935	QTE1V06-106Z	E.CAPA. I.M		
	C 936	QTE1V06-106Z	E.CAPA. I.M		
	C 937	QETN1HM-106Z	E CAPACITOR	10MF 20% 50V	
	C 938	QETN1HM-106Z	E CAPACITOR	10MF 20% 50V	
	C 939	QCBB1HK-101Y	C.CAPACITOR	100PF 10% 50V	
	C 940	QCBB1HK-101Y	C.CAPACITOR	100PF 10% 50V	
	C 941	QET41HM-226	E CAPACITOR	22MF 20% 50V	
	C 942	QET41HM-226	E CAPACITOR	22MF 20% 50V	
	C 943	QET41HM-105	E CAPACITOR	1.0MF 20% 50V	
	C 944	QFLC1HJ-223ZM	M CAPACITOR	.022MF 5% 50V	
	C 945	QET41CM-476	E CAPACITOR	47MF 20% 16V	
	C 946	QET41CM-226	E CAPACITOR	22MF 20% 16V	
	C 947	QFLC1HJ-223ZM	M CAPACITOR	.022MF 5% 50V	B,E,EN
	C 948	QFLC1HJ-223ZM	M CAPACITOR	.022MF 5% 50V	B,E,EN
	C 949	QFLC1HJ-223ZM	M CAPACITOR	.022MF 5% 50V	B,E,EN
	C 950	QFLC1HJ-223ZM	M CAPACITOR	.022MF 5% 50V	B,E,EN
	C 951	QET41HM-105	E CAPACITOR	1.0MF 20% 50V	
	C 958	QCF21HP-223A	C.CAPACITOR	.022MF +80:-20%	
	C 961	QETN1HM-106Z	E CAPACITOR	10MF 20% 50V	
	C 963	QFLC1HJ-153ZM	M.CAPACITOR	.015MF 5% 50V	
	C 964	QFLC1HJ-153ZM	M.CAPACITOR	.015MF 5% 50V	
	C 967	QFV41HJ-104ZM	TF CAPACITOR	.10MF 5% 50V	
	C 971	QCY31HK-272Z	C.CAPACITOR	2700PF 10% 50V	B,E,EN
	C 972	QCY31HK-272Z	C.CAPACITOR	2700PF 10% 50V	B,E,EN
	C 973	QCF31HP-103Z	C.CAPACITOR	.010MF +80:-20%	B,E,EN
	CN900	EMV7125-011R	CONECTOR		
	CN901	EMV7125-008R	CONNECTOR		

BLOCK NO. 01

⚠	REF.	PARTS NO.	PARTS NAME	REMARKS	SUFFIX
	CN903	EMV7145-004Z	SOCKET		
	CN904	EMV7145-005Z	SOCKET		
	CN905	EMV7145-005Z	SOCKET		
	D 900	1SS133-T2	DIODE		
	D 901	MTZ9.1JA	ZENER DIODE		
	D 902	1SR35-100	SI DIODE		
	D 903	1SR35-100	SI DIODE		
	D 908	1N5401TM	DIODE		B,E,EE,EN,A
	D 908	1N5401TM	DIODE		US,UT,UX
	D 908	1N5401TM	DIODE		U,UB,
	D 908	10E2-FD	DIODE		C,J
	D 909	10E2-FD	DIODE		C,J
	D 909	1N5401TM	DIODE		B,E,EE,EN,A
	D 909	1N5401TM	DIODE		US,UT,UX
	D 909	1N5401TM	DIODE		U,UB,
	D 910	1N5401TM	DIODE		B,E,EE,EN,A
	D 910	1N5401TM	DIODE		US,UT,UX
	D 910	1N5401TM	DIODE		U,UB,
	D 910	10E2-FD	DIODE		C,J
	D 911	10E2-FD	DIODE		C,J
	D 911	1N5401TM	DIODE		B,E,EE,EN,A
	D 911	1N5401TM	DIODE		US,UT,UX
	D 911	1N5401TM	DIODE		U,UB,
	D 916	1SR139-200	SI DIODE		
	D 917	1SR139-200	SI DIODE		
	D 918	MTZ33JC	ZENER DIODE		
	D 919	UZ6.2BSA	Z.DIODE IDM		
	D 920	MTZ24JC	ZENER DIODE		
	D 921	1SS133-T2	DIODE		
	D 922	1SS133-T2	DIODE		
	D 923	1SS133-T2	DIODE		
	D 924	1SS133-T2	DIODE		
	D 926	1SS133-T2	DIODE		
	D 927	MTZ5.1JC	ZENER DIODE		
	FT001	EMG7331-003Z	FUSE CLIP I.M		A,U,UB,
	FT001	EMG7331-003Z	FUSE CLIP I.M		US,UT,UX
	FT002	EMG7331-003Z	FUSE CLIP I.M		US,UT,UX
	FT002	EMG7331-003Z	FUSE CLIP I.M		U,UB, ,A
	FT003	EMG7331-003Z	FUSE CLIP I.M		
	FT004	EMG7331-003Z	FUSE CLIP I.M		
	FT005	EMG7331-003Z	FUSE CLIP I.M		
	FT006	EMG7331-003Z	FUSE CLIP I.M		
	FT007	EMG7331-003Z	FUSE CLIP I.M		
	FT008	EMG7331-003Z	FUSE CLIP I.M		
	IC900	TDA7294	I.C.		C,J
	IC900	TDA7295	IC		B,E,EE,EN,A
	IC900	TDA7295	IC		U,UB,
	IC900	TDA7295	IC		US,UT,UX
	IC901	TDA7295	IC		
	JA901	EMB90TV-402A	SPK TERMINAL		
	L 100	VQZ0048-009	INDUCTOR		B,E,EN
	L 900	EQL0011-R45J1	INDUCTOR		
	L 901	EQL0011-R45J1	INDUCTOR		
	L 971	VQZ0104-003	INDUCTOR		B,E,EN
	L 972	VQZ0104-003	INDUCTOR		B,E,EN

BLOCK NO. 01

⚠	REF.	PARTS NO.	PARTS NAME	REMARKS	SUFFIX
	Q 901	2SA1175	TRANSISTOR		
	Q 902	DTC144TSA-T	D.TR.I.M		
	Q 903	DTA144TSA-T	D.TR.I.M		
	Q 904	2SB1375	TRANSISTOR		
	Q 905	2SC2785	TRANSISTOR		
	Q 906	2SC2785	TRANSISTOR		
	Q 911	2SA934(Q,R)	TR I.M		
	Q 912	DTA114ES	D.TR.I.M		
	Q 917	2SC945A	TRANSISTOR		
	Q 918	2SC945A	TRANSISTOR		
	Q 919	2SA933S(RS)	TRANSISTOR		
	Q 920	2SC945A	TRANSISTOR		
	Q 921	2SD2144S(VW)	TR I/M		
	Q 922	2SD2144S(VW)	TR I/M		
	Q 923	DTC114YSA-T	D.TRANSISTOR		
	Q 924	DTC114YSA-T	D.TRANSISTOR		
	Q 925	DTA114ES	D.TR.I.M		
	Q 983	2SD2144S(VW)	TR I/M		
	Q 984	2SD2144S(VW)	TR I/M		
	R 93	QRZ9044-335	COMP.RESISTOR	3.3M 1/0W	
	R 93	QRZ9044-335	COMP.RESISTOR	3.3M 1/0W	
	R 94	QRZ9044-335	COMP.RESISTOR	3.3M 1/0W	
	R 94	QRZ9044-335	COMP.RESISTOR	3.3M 1/0W	
	R 001	QRZ9044-335	COMP.RESISTOR	3.3M 1/0W	C,J
	R 900	QRD161J-471	C RESISTOR	470 5% 1/4W	
	R 901	QRD161J-102	C RESISTOR	1.0K 5% 1/4W	
	R 902	QRD161J-1R0	C RESISTOR	1.0 5% 1/4W	
	R 903	QRD161J-1R0	C RESISTOR	1.0 5% 1/4W	
	R 904	QRD161J-1R0	C RESISTOR	1.0 5% 1/4W	
	R 905	QRD167J-682	C RESISTOR	6.8K 5% 1/4W	
	R 906	QRD161J-122	C RESISTOR	1.2K 5% 1/4W	
	R 907	QRD161J-821	C RESISTOR	820 5% 1/4W	
	R 908	QRZ0077-151X	F.RES. I.M	150 1/0W	
	R 909	QRD161J-472	C RESISTOR	4.7K 5% 1/4W	
	R 910	QRD161J-471	C RESISTOR	470 5% 1/4W	
	R 911	QRD161J-222	C RESISTOR	2.2K 5% 1/4W	
	R 912	QRD161J-222	C RESISTOR	2.2K 5% 1/4W	
	R 913	QRD161J-472	C RESISTOR	4.7K 5% 1/4W	
	R 914	QRD161J-472	C RESISTOR	4.7K 5% 1/4W	
	R 915	QRZ0077-100	FUSE RESISTOR	10 1/0W	
	R 916	QRD161J-222	C RESISTOR	2.2K 5% 1/4W	
	R 921	QRD161J-222	C RESISTOR	2.2K 5% 1/4W	
	R 922	QRD161J-222	C RESISTOR	2.2K 5% 1/4W	
	R 931	QRD161J-1R0	C RESISTOR	1.0 5% 1/4W	
	R 933	QRD161J-1R0	C RESISTOR	1.0 5% 1/4W	
	R 935	QRD161J-102	C RESISTOR	1.0K 5% 1/4W	
	R 936	QRD161J-103	C RESISTOR	10K 5% 1/4W	
	R 937	QRD161J-152	C RESISTOR	1.5K 5% 1/4W	
	R 938	QRD161J-330	C RESISTOR	33 5% 1/4W	
	R 939	QRG01DJ-471X	OMF RESISTOR	470 5% 1/1W	
	R 940	QRD14CJ-100SX	CARBON RESISTOR	10 5% 1/4W	
	R 941	QRD14CJ-100SX	CARBON RESISTOR	10 5% 1/4W	
	R 942	QRD14CJ-100SX	CARBON RESISTOR	10 5% 1/4W	
	R 943	QRD14CJ-100SX	CARBON RESISTOR	10 5% 1/4W	
	R 944	QRD161J-823	C RESISTOR	82K 5% 1/4W	

BLOCK NO. 01

⚠	REF.	PARTS NO.	PARTS NAME	REMARKS	SUFFIX
	R 945	QRD161J-104	C RESISTOR	100K 5% 1/4W	
	R 946	QRX014J-R22	UNF.MF.RES.I.M	5% 1/1W	
	R 947	QRX014J-R22	UNF.MF.RES.I.M	5% 1/1W	
	R 948	QRD161J-122	C RESISTOR	1.2K 5% 1/4W	
	R 949	QRD161J-122	C RESISTOR	1.2K 5% 1/4W	
	R 950	QRD161J-823	C RESISTOR	82K 5% 1/4W	
	R 951	QRD161J-823	C RESISTOR	82K 5% 1/4W	
	R 952	QRD14CJ-561SX	UNF.C.RES. I.M	560 5% 1/4W	
	R 953	QRD14CJ-561SX	UNF.C.RES. I.M	560 5% 1/4W	
	R 954	QRD161J-104	C RESISTOR	100K 5% 1/4W	
	R 955	QRD161J-104	C RESISTOR	100K 5% 1/4W	
	R 956	QRD161J-223	C RESISTOR	22K 5% 1/4W	
	R 957	QRD161J-103	C RESISTOR	10K 5% 1/4W	C,J
	R 957	QRD161J-102	C RESISTOR	1.0K 5% 1/4W	US,UT,UX
	R 957	QRD161J-102	C RESISTOR	1.0K 5% 1/4W	A,U,UB,
	R 957	QRD161J-102	C RESISTOR	1.0K 5% 1/4W	B,E,EE,EN
	R 958	QRZ0077-4R7X	F RES I/M	4.7 1/0W	
	R 959	QRD161J-104	C RESISTOR	100K 5% 1/4W	
	R 960	QRD161J-223	C RESISTOR	22K 5% 1/4W	
	R 961	QRD161J-104	C RESISTOR	100K 5% 1/4W	
	R 962	QRD161J-103	C RESISTOR	10K 5% 1/4W	
	R 963	QRD161J-122	C RESISTOR	1.2K 5% 1/4W	
	R 964	QRZ0077-681	F.RES. I.M	680 1/0W	C,J
	R 964	QRD161J-681	C RESISTOR	680 5% 1/4W	US,UT,UX
	R 964	QRD161J-681	C RESISTOR	680 5% 1/4W	U,UB,
	R 964	QRD161J-681	C RESISTOR	680 5% 1/4W	B,E,EE,EN,A
	R 965	QRD161J-681	C RESISTOR	680 5% 1/4W	US,UT,UX
	R 965	QRD161J-681	C RESISTOR	680 5% 1/4W	U,UB,
	R 965	QRD161J-681	C RESISTOR	680 5% 1/4W	B,E,EE,EN,A
	R 965	QRZ0077-681	F.RES. I.M	680 1/0W	C,J
	R 966	QRD161J-821	C RESISTOR	820 5% 1/4W	
	R 967	QRD161J-821	C RESISTOR	820 5% 1/4W	
	R 968	QRD161J-103	C RESISTOR	10K 5% 1/4W	
	R 969	QRD161J-103	C RESISTOR	10K 5% 1/4W	
	R 971	QRD161J-563	C RESISTOR	56K 5% 1/4W	
	R 972	QRD161J-563	C RESISTOR	56K 5% 1/4W	
	R 973	QRD167J-4R7	C RESISTOR	4.7 5% 1/4W	B,E,EN
	R 974	QRD167J-4R7	C RESISTOR	4.7 5% 1/4W	B,E,EN
	R 975	QRD161J-104	C RESISTOR	4.7 5% 1/4W	
	R 976	QRD161J-103	C RESISTOR	10K 5% 1/4W	
	R 977	QRD161J-104	C RESISTOR	100K 5% 1/4W	
	R 978	QRD161J-104	C RESISTOR	100K 5% 1/4W	
	R 982	QRZ0077-220X	F.RES. I.M	22 1/0W	C,J
	R 983	QRD161J-472	C RESISTOR	4.7K 5% 1/4W	
	R 984	QRD161J-472	C RESISTOR	4.7K 5% 1/4W	
	R 990	QRD161J-102	C RESISTOR	1.0K 5% 1/4W	
	R 991	QRD161J-102	C RESISTOR	1.0K 5% 1/4W	
	R 992	QRD161J-472	C RESISTOR	4.7K 5% 1/4W	
	R 993	QRD161J-472	C RESISTOR	4.7K 5% 1/4W	
	R 997	QRD161J-103	C RESISTOR	10K 5% 1/4W	US,UT,UX
	R 997	QRD161J-103	C RESISTOR	10K 5% 1/4W	A,U,UB,
	R 998	QRD161J-103	C RESISTOR	10K 5% 1/4W	US,UT,UX
	R 998	QRD161J-103	C RESISTOR	10K 5% 1/4W	A,U,UB,
	R 999	QRD161J-103	C RESISTOR	10K 5% 1/4W	US,UT,UX
	R 999	QRD161J-103	C RESISTOR	10K 5% 1/4W	A,U,UB,

BLOCK NO. 01

⚠	REF.	PARTS NO.	PARTS NAME	REMARKS	SUFFIX
	RY901	QSK0057-001	RELAY		
	S 001	QSW0524-001	VOLTAGE SW		US,UT,UX
	S 001	QSW0524-001	VOLTAGE SW		A,U,UB,
	TB001	EMZ4001-002Z	TAB I.M		
	TB002	EMZ4001-002Z	TAB I.M		
	WA-A	QWE881-14RR	WIRE		B,E,EN
	W001	QWE886-24RR	WIRE		US,UT,UX
	W001	QWE886-24RR	WIRE		A,U,UB,
	W002	QWE884-20RR	WIRE		US,UT,UX
	W002	QWE884-20RR	WIRE		A,U,UB,
	W003	QWE883-24RR	WIRE		US,UT,UX
	W003	QWE883-24RR	WIRE		A,U,UB,
	W004	QWE882-20RR	WIRE		US,UT,UX
	W004	QWE882-20RR	WIRE		A,U,UB,
	W006	QWE886-22RR	WIRE		US,UT,UX
	W006	QWE886-22RR	WIRE		A,U,UB,
	W007	QWE881-24RR	WIRE		US,UT,UX
	W007	QWE881-24RR	WIRE		A,U,UB,

■ Electrical Parts List (Pre Amplifier & Tuner)

BLOCK NO. 02

⚠	REF.	PARTS NO.	PARTS NAME	REMARKS	SUFFIX
	C 1	QCC11EM-223V	C CAPACITOR	.022MF 20% 25V	
	C 2	QCXB1CM-332Y	C CAPACITOR	3300PF 20% 16V	
	C 3	QCC11EM-473V	C CAPACITOR	.047MF 20% 25V	
	C 4	QCVB1CN-103Y	C CAPACITOR	.010MF 30% 16V	
	C 5	QETN1CM-476Z	E CAPACITOR	47MF 20% 16V	US,UT,UX
	C 5	QETN1CM-476Z	E CAPACITOR	47MF 20% 16V	A,C,J,U,UB,
	C 5	QETN1AM-107Z	E CAPACITOR	100MF 20% 10V	
	C 6	QCBB1HK-331Y	C.CAPACITOR	330PF 10% 50V	
	C 7	QCFB1HZ-104Y	C.CAPACITOR	.10MF +80:-20%	
	C 8	QCS11HJ-150	C.CAPACITOR	15PF 5% 50V	B,E,EE,EN
	C 11	QCC11EM-473V	C CAPACITOR	.047MF 20% 25V	B,E,EE,EN
	C 12	QCSB1HJ-100Y	C.CAPACITOR	10PF 5% 50V	US,UT,UX
	C 12	QCSB1HJ-100Y	C.CAPACITOR	10PF 5% 50V	A,C,J,U,UB,
	C 12	QCSB1HJ-150Y	C.CAPACITOR	15PF 5% 50V	B,E,EE,EN
	C 13	QCVB1CN-103Y	C CAPACITOR	.010MF 30% 16V	
	C 17	QCGB1HK-102	C.CAPACITOR	1000PF 10% 50V	B,E,EE,EN
	C 18	QCBB1HK-471Y	C.CAPACITOR	470PF 10% 50V	
	C 19	QCBB1HK-471Y	C.CAPACITOR	470PF 10% 50V	
	C 21	QCC11EM-473V	C CAPACITOR	.047MF 20% 25V	
	C 30	QEK41CM-476	E CAPACITOR	47MF 20% 16V	
	C 31	QCSB1HJ-390Y	C.CAPACITOR	39PF 5% 50V	B,E,EE,EN
	C 32	QCGB1HK-102	C CAPACITOR	1000PF 10% 50V	
	C 33	QEK61AM-107ZM	E CAPACITOR	100MF 20% 10V	
	C 34	QCSB1HJ-150Y	C.CAPACITOR	15PF 5% 50V	
	C 35	QCVB1CN-103Y	C CAPACITOR	.010MF 30% 16V	
	C 36	QEK61EM-106ZN	E CAPACITOR	10MF 20% 16V	
	C 37	QCVB1CN-103Y	C CAPACITOR	.010MF 30% 16V	
	C 38	QCC11EM-473V	C CAPACITOR	.047MF 20% 25V	
	C 39	QCC11EM-473V	C CAPACITOR	.047MF 20% 25V	
	C 40	QCVB1CN-103Y	C CAPACITOR	.010MF 30% 16V	
	C 41	QEK61HM-104ZN	E.CAPACITOR	.10MF 20% 50V	
	C 42	QEK61HM-474GZ	E CAPACITOR	.47MF 20% 50V	
	C 43	QEK61HM-335ZN	E.CAPACITOR	3.3MF 20% 50V	B,E,EE,EN
	C 44	QCSB1HJ-680Y	C CAPACITOR	68PF 5% 50VV	US,UT,UX
	C 44	QCSB1HJ-680Y	C.CAPACITOR	68PF 5% 50V	A,C,J,U,UB,
	C 44	QCBB1HK-221Y	C.CAPACITOR	220PF 10% 50V	B,E,EE,EN
	C 45	QEK61HM-335ZN	E.CAPACITOR	3.3MF 20% 50V	US,UT,UX
	C 45	QEK61HM-335ZN	E.CAPACITOR	3.3MF 20% 50V	A,C,J,U,UB,
	C 45	QEK61EM-106ZN	E CAPACITOR	10MF 20% 16V	B,E,EE,EN
	C 46	QCC11EM-223V	C CAPACITOR	.022MF 20% 25V	
	C 46	QCC31EM-333ZV	C.CAPACITOR	.033MF 20% 25V	US,UT,UX
	C 46	QCC31EM-333ZV	C.CAPACITOR	.033MF 20% 25V	A,C,J,U,UB,
	C 47	QCVB1CN-103Y	C CAPACITOR	.010MF 30% 16V	
	C 49	QFLC1HJ-393ZM	M CAPACITOR	.039MF 5% 50V	US,UT,UX,C
	C 49	QFLC1HJ-183ZM	M CAPACITOR	.018MF 5%50V	
	C 49	QFLC1HJ-273ZM	M CAPACITOR	.027MF 5% 50V	A
	C 49	QFLC1HJ-393ZM	M CAPACITOR	.039MF 5% 50V	U,UB, ,J
	C 50	QFLC1HJ-393ZM	M CAPACITOR	.039MF 5% 50V	U,UB, ,J
	C 50	QFLC1HJ-393ZM	M CAPACITOR	.039MF 5% 50V	US,UT,UX,C
	C 50	QFLC1HJ-273ZM	M CAPACITOR	.027MF 5% 50V	A
	C 50	QFLC1HJ-183ZM	M CAPACITOR	.018MF 5%50V	
	C 51	QEK51HM-105G	E.CAPACITOR	1.0MF 20% 50V	
	C 52	QEK51HM-105G	E.CAPACITOR	1.0MF 20% 50V	
	C 53	QCGB1HK-102	C CAPACITOR	1000PF 10% 50V	B,E,EN
	C 54	QEK61HM-335ZN	E.CAPACITOR	3.3MF 20% 50V	B,E,EN

BLOCK NO. 02

⚠	REF.	PARTS NO.	PARTS NAME	REMARKS	SUFFIX
	C 55	QCSB1HJ-120Y	C.CAPACITOR	12PF 5% 50V	
	C 60	QEK61AM-107ZM	E CAPACITOR	100MF 20% 10V	
	C 61	QCS11HJ-120	C.CAPACITOR	12PF 5% 50V	
	C 62	QCS11HJ-120	C.CAPACITOR	12PF 5% 50V	
	C 63	QCC11EM-473V	C CAPACITOR	.047MF 20% 25V	
	C 65	QCGB1HK-102	C CAPACITOR	1000PF 10% 50V	
	C 66	QCBB1HK-151Y	C.CAPACITOR	150PF 10% 50V	
	C 67	QCBB1HK-151Y	C.CAPACITOR	150PF 10% 50V	
	C 68	QCBB1HK-101Y	C.CAPACITOR	100PF 10% 50V	
	C 69	QFV41HJ-105	TF.CAPA. I.M XX	1.0MF 5% 50V	
	C 70	QCXB1CM-392Y	C.CAPACITOR	3900PF 20% 16V	
	C 71	QET41CM-476	E CAPACITOR	47MF 20% 16V	
	C 72	QCGB1HK-102	C CAPACITOR	1000PF 10% 50V	
	C 98	QCSB1HJ-100Y	CER.CAPACITOR-S	10PF 5% 50V	B,E,EN
	C 101	QCS11HJ-330	C.CAPACITOR	33PF 5% 50V	
	C 102	QCS11HJ-100	C.CAPACITOR	10PF 5% 50V	
	C 103	QFV41HJ-224	FILM CAPACITOR	.22MF 5% 50V	
	C 104	EETB1CM-226E	E.CAPA. I.M		
	C 106	QETN1HM-335Z	E CAPACITOR	3.3MF 20% 50V	
	C 108	QTE1V06-106Z	E.CAPA. I.M		
	C 110	QFV71HJ-124ZM	TF CAPACITOR	.12MF 5% 50V	
	C 111	QFV71HJ-124ZM	TF CAPACITOR	.12MF 5% 50V	
	C 112	QET41AM-107	E CAPACITOR	100MF 20% 10V	
	C 113	QTE1V06-106Z	E.CAPA. I.M		
	C 116	QETC1HM-106ZN	E.CAPACITOR	10MF 20% 50V	
	C 122	QETN1HM-335Z	E CAPACITOR	3.3MF 20% 50V	
	C 130	QCS11HJ-330	C.CAPACITOR	33PF 5% 50V	
	C 201	QCS11HJ-330	C.CAPACITOR	33PF 5% 50V	
	C 202	QCS11HJ-100	C.CAPACITOR	10PF 5% 50V	
	C 203	QFV41HJ-224	FILM CAPACITOR	.22MF 5% 50V	
	C 204	EETB1CM-226E	E.CAPA. I.M		
	C 206	QETN1HM-335Z	E CAPACITOR	3.3MF 20% 50V	
	C 208	QTE1V06-106Z	E.CAPA. I.M		
	C 210	QFV71HJ-124ZM	TF CAPACITOR	.12MF 5% 50V	
	C 211	QFV71HJ-124ZM	TF CAPACITOR	.12MF 5% 50V	
	C 212	QET41AM-107	E CAPACITOR	100MF 20% 10V	
	C 213	QTE1V06-106Z	E.CAPA. I.M		
	C 216	QETC1HM-106ZN	E.CAPACITOR	10MF 20% 50V	
	C 222	QETN1HM-335Z	E CAPACITOR	3.3MF 20% 50V	
	C 230	QCS11HJ-330	C.CAPACITOR	33PF 5% 50V	
	C 301	QCGB1HK-102	C CAPACITOR	1000PF 10% 50V	
	C 303	QETC1HM-225ZN	E.CAPACITOR	2.2MF 20% 50V	B,E,EE,EN,C,U
	C 305	QFLC1HJ-223ZM	M CAPACITOR	.022MF 5% 50V	
	C 306	EETB1HM-475E	E.CAPA. I.M		
	C 307	EETB1HM-475E	E.CAPA. I.M		
	C 308	EETB1CM-226E	E.CAPA. I.M		
	C 309	QCS11HJ-150	C.CAPACITOR	15PF 5% 50V	
	C 310	QCBB1HK-471Y	C.CAPACITOR	470PF 10% 50V	
	C 311	QCS11HJ-150	C.CAPACITOR	15PF 5% 50V	
	C 312	QCBB1HK-151Y	C.CAPACITOR	150PF 10% 50V	
	C 313	QCBB1HK-471Y	C.CAPACITOR	470PF 10% 50V	
	C 314	QETC1HM-224Z	E.CAPA. I.M	.22MF 20% 50V	
	C 315	QFLC1HJ-103ZM	M CAPACITOR	.010MF 5% 50V	
	C 316	QFLC1HJ-393ZM	M CAPACITOR	.039MF 5% 50V	
	C 317	QFLC1HJ-473ZM	M CAPACITOR	.047MF 5% 50V	

BLOCK NO. 02

⚠	REF.	PARTS NO.	PARTS NAME	REMARKS	SUFFIX
	C 318	QFLC1HJ-103ZM	M CAPACITOR	.010MF 5% 50V	
	C 319	QFLC1HJ-393ZM	M CAPACITOR	.039MF 5% 50V	
	C 320	QFLC1HJ-473ZM	M CAPACITOR	.047MF 5% 50V	
	C 321	EETB1EM-106E	E.CAPA. I.M		
	C 322	EETB1AM-476E	E.CAPA. I.M		
	C 324	EETC1CM-106ZJC	E.CAPACITOR		
	C 325	EETB1HM-105E	E.CAPA. I.M		
	C 327	QFV71HJ-184ZM	FILM CAPACITOR	.18MF 5% 50V	
	C 329	QETB1HM-474N	E.CAPA. I.M	.47MF 20% 50V	
	C 332	QFLC1HJ-103ZM	M CAPACITOR	.010MF 5% 50V	
	C 334	QFLC1HJ-223ZM	M CAPACITOR	.022MF 5% 50V	
	C 335	QET41AM-107	E CAPACITOR	100MF 20% 10V	
	C 336	QET41CM-106	E CAPACITOR	10MF 20% 16V	A,U,UB,
	C 336	QET41CM-106	E CAPACITOR	10MF 20% 16V	US,UT,UX
	C 338	QET41CM-106	E CAPACITOR	10MF 20% 16V	A,U,UB,
	C 338	QET41CM-106	E CAPACITOR	10MF 20% 16V	US,UT,UX
	C 339	QET41HM-475	E CAPACITOR	4.7MF 20% 50V	A,U,UB,
	C 339	QET41HM-475	E CAPACITOR	4.7MF 20% 50V	US,UT,UX
	C 340	QET41CM-106	E CAPACITOR	10MF 20% 16V	US,UT,UX
	C 340	QET41CM-106	E CAPACITOR	10MF 20% 16V	A,U,UB,
	C 342	QFV71HJ-334ZM	FILM CAPACITOR	.33MF 5% 50V	US,UT,UX
	C 342	QFV71HJ-334ZM	FILM CAPACITOR	.33MF 5% 50V	A,U,UB,
	C 343	QFLC1HJ-683ZM	M CAPACITOR	.068MF 5% 50V	US,UT,UX
	C 343	QFLC1HJ-683ZM	M CAPACITOR	.068MF 5% 50V	A,U,UB,
	C 344	QET41CM-106	E CAPACITOR	10MF 20% 16V	US,UT,UX
	C 344	QET41CM-106	E CAPACITOR	10MF 20% 16V	A,U,UB,
	C 345	QFLC1HJ-682ZM	M CAPACITOR	6800PF 5% 50V	A,U,UB,
	C 345	QFLC1HJ-682ZM	M CAPACITOR	6800PF 5% 50V	US,UT,UX
	C 347	QET41CM-226	E CAPACITOR	22MF 20% 16V	US,UT,UX
	C 347	QET41CM-226	E CAPACITOR	22MF 20% 16V	A,U,UB,
	C 350	QET41HM-105	E CAPACITOR	1.0MF 20% 50V	US,UT,UX
	C 350	QET41HM-105	E CAPACITOR	1.0MF 20% 50V	A,U,UB,
	C 351	EETB1CM-476	E.CAPA. I.M		
	C 352	QET41EM-106	E CAPACITOR	10MF 20% 25V	
	C 357	QETC1CM-226Z	E CAPACITOR	22MF 20% 16V	US,UT,UX
	C 357	QETC1CM-226Z	E CAPACITOR	22MF 20% 16V	A,U,UB,
	C 361	EETB1HM-105E	E CAPACITOR		US,UT,UX
	C 361	EETB1HM-105E	E CAPACITOR		A,U,UB,
	C 362	QCBB1HK-151Y	C CAPACITOR	150PF 10% 50V	
	C 363	QETN1AM-108Z	E.CAPA. I.M	1000MF 20% 10V	
	C 364	QETN1AM-108Z	E.CAPA. I.M	1000MF 20% 10V	
	C 366	QCBB1HK-151Y	C CAPACITOR	150PF 10% 50V	US,UT,UX
	C 366	QCBB1HK-151Y	C CAPACITOR	150PF 10% 50V	A,U,UB,
	C 367	QFV41HJ-104ZM	TF CAPACITOR	.10MF 5% 50V	
	C 368	QFV41HJ-104ZM	TF CAPACITOR	.10MF 5% 50V	
	C 380	QCSB1HJ-330Y	C CAPACITOR	33PF 5% 50V	
	C 381	QCXB1CM-182Y	C CAPACITOR	1800PF 20% 16V	
	C 382	QFLC1HJ-153ZM	M CAPACITOR	.015MF 5% 50V	
	C 383	QCBB1HK-681Y	C CAPACITORM	680PF 10% 50V	
	C 384	EETB1HM-105E	E CAPACCITOR		
	C 385	QETC1HM-476ZM	E CAPACCITOR	47MF 20% 50V	
	C 908	EETB1HM-475E	E.CAPA. I.M		
	C 909	EETB1CM-226E	E.CAPA. I.M		
	C 910	EETC1CM-106ZJC	E.CAPACITOR		
	C 911	QFLC1HJ-103ZM	M CAPACITOR	.010MF 5% 50V	

BLOCK NO. 02

⚠	REF.	PARTS NO.	PARTS NAME	REMARKS	SUFFIX
	C 912	QET41AM-107	E CAPACITOR	100MF 20% 10V	
	C 920	QFLC1HJ-103ZM	M CAPACITOR	.010MF 5% 50V	
	C 921	QET41AM-107	E CAPACITOR	100MF 20% 10V	
	C 968	QCVB1CN-103Y	C CAPACCITOR	.010MF 30% 16V	
	CF 1	VCF2L3B-108Z	C FILTER		US,UT,UX,C,J
	CF 1	VCF2L3B-108Z	C FILTER		A,U,UB,
	CF 2	VCF2S3B-102	C FILTER		B,E,EE,EN
	CF 2	VCF2L3B-108Z	C FILTER		US,UT,UX
	CF 2	VCF2L3B-108Z	C FILTER		A,C,J,U,UB,
	CF 3	VCF1Z2Z-115Z	CERAMIC FILTER		
	CF 4	CMU2-456A05	CERA LOCK		
	CN302	VMC0332-010V	CONNECTOR		
	CN303	VMC0332-013V	CONNECTOR		
	CN304	VMC0332-007V	CONNECTOR		
	CN305	VMC0332-011V	CONNECTOR		
	CN306	VMC0332-010V	CONNECTOR		
	CN307	EMV5125-008	CONNECTOR		
	CN308	EMV5125-011	CONNECTOR		
	CN310	EMV7145-005Z	SOCKET		A,U,UB,
	CN310	EMV7145-005Z	SOCKET		US,UT,UX
	CN313	EMV7145-003Z	CONNECTOR		
	CN316	VMC0332-017V	CONNECTOR		
	D 1	1SS133-T2	DIODE		
	D 2	1SS133-T2	DIODE		
	D 3	1SS133-T2	DIODE		
	D 4	1SS133-T2	DIODE		
	D 7	1SS133-T2	DIODE		
	D 300	RB721Q-T2	S.B.DIODE		
	D 301	1SS133-T2	DIODE		
	D 302	1SS133-T2	DIODE		
	D 303	RB721Q-T2	S.B.DIODE		
	D 304	1SS133-T2	DIODE		
	D 305	MTZ5.1JAT-77	ZENER DIODE		
	D 306	1SS133-T2	DIODE		
	D 307	1SS133-T2	DIODE		
	D 308	1SS133-T2	DIODE		
	D 310	1SS133-T2	DIODE		
	D 311	1SS133-T2	DIODE		
	D 312	1SS133-T2	DIODE		
	D 313	1SS133-T2	DIODE		
	D 314	1SS133-T2	DIODE		
	D 315	1SR35-100	SI DIODE		
	D 318	1SS133-T2	DIODE		
	D 319	1SS133-T2	DIODE		
	D 322	1SS133-T2	DIODE		
	D 380	1SS133-T2	S.B.DIODE		
	D 385	1SS133-T2	DIODE		A,U,UB,
	D 385	1SS133-T2	DIODE		US,UT,UX
	D 904	MTZ4.3JB	ZENER DIODE		
	D 905	1SS133-T2	DIODE		
	D 906	1SS133-T2	DIODE		
	D 907	MTZ3.9JB	Z DIODE I/M		
	D 912	RD5.6JSAB1	ZENER DIODE		
	D 913	1SS133-T2	DIODE		
	D 915	1SS133-T2	DIODE		

BLOCK NO. 02

⚠	REF.	PARTS NO.	PARTS NAME	REMARKS	SUFFIX
	D 928	MTZ2.4JB	Z.DIODE I.M		
	EP001	E409182-001SM	GRAND TERMINAL		
	FW501	EWR32D-26SSV	FLAT WIRE		
	IC 1	TA2057N	IC		
	IC 2	LC72136N	IC		
	IC301	NJM4580L	IC		
	IC302	BH3854AS	IC		
	IC303	NJM4580L	IC		
	IC305	BA3837	IC(VOCALFADER)		A,U,UB,
	IC305	BA3837	IC(VOCALFADER)		US,UT,UX
	J 1	FMMB10YV-401K	ANT TERMINAL		US,UT,UX
	J 1	FMMB10YV-401K	ANT TERMINAL		A,C,J,U,UB,
	J 1	EMB41YV-302K	ANT TERMINAL		B,E,EE,EN
	JA301	EMN00TV-222AJ2	PIN JACK		
	L 1	VQZ0098-101	COIL BLOCK		B,E,EE,EN
	L 1	VQZ0098-202	COIL BLOCK		US,UT,UX
	L 1	VQZ0098-202	COIL BLOCK		A,C,J,U,UB,
	L 4	VQP0018-221	INDUCTOR		
	L 10	VQZ0069-002S	TRAP COIL		B,E,EN
	L 11	VQP0018-2R7	INDUCTOR		B,E,EE,EN
	L 12	VQP0018-330	INDUCTIR		B,E,EN
	L 302	VQZ0048-009	INDUCTOR		B,E,EN
	L 303	VQZ0048-009	INDUCTOR		B,E,EN
	L 304	VQZ0048-009	INDUCTOR		B,E,EN
	L 305	VQZ0048-009	INDUCTOR		B,E,EE,EN
	L 306	QQL29BJ-100Z	INDUCTOR		
	PP301	VMZ0015-005	POST PIN		
	PP302	VMZ0015-005	POST PIN		
	Q 1	2SC1923	TR TAPE		
	Q 2	DTA114YS	TRANSISTOR		B,E,EE,EN
	Q 3	2SC2785	TRANSISTOR		B,E,EE,EN
	Q 4	2SC2785	TRANSISTOR		B,E,EE,EN
	Q 6	DTA114YS	TRANSISTOR		
	Q 16	2SC2785	TRANSISTOR		B,E,EN
	Q 301	2SD2144S(VW)	TR I/M		
	Q 302	2SD2144S(VW)	TR I/M		
	Q 303	DTA114YS	TRANSISTOR		
	Q 304	2SK246(GR,BL)	FET I.M		
	Q 305	2SK246(GR,BL)	FET I.M		
	Q 306	DTC144TSA-T	D.TR.I.M		
	Q 307	2SD2144S(VW)	TR I/M		
	Q 308	2SD2144S(VW)	TR I/M		
	Q 309	2SC2785	TRANSISTOR		
	Q 310	2SC2785	TRANSISTOR		
	Q 311	DTA114ES	D.TR.I.M		
	Q 312	2SC2785	TRANSISTOR		
	Q 313	DTC144TSA-T	D.TR.I.M		
	Q 314	DTA144ES	D.TR.I.M		
	Q 315	2SD2144S(VW)	TR I/M		US,UT,UX
	Q 315	2SD2144S(VW)	TR I/M		A,U,UB,
	Q 316	2SD2144S(VW)	TR I/M		A,U,UB,
	Q 316	2SD2144S(VW)	TR I/M		US,UT,UX
	Q 317	2SC2785	TRANSISTOR		A,U,UB,
	Q 317	2SC2785	TRANSISTOR		US,UT,UX
	Q 320	DTC144TSA-T	D.TR.I.M		

BLOCK NO. 02

⚠	REF.	PARTS NO.	PARTS NAME	REMARKS	SUFFIX
	Q 380	2SC2785	TRANSISTOR		
	Q 381	2SC2785	TRANSISTOR		
	Q 907	2SA1175	TRANSISTOR		
	Q 908	2SC2785	TRANSISTOR		
	Q 909	2SB1375	TRANSISTOR		
	Q 910	2SC2785	TRANSISTOR		
	Q 913	2SB1375	TRANSISTOR		
	Q 914	2SC2785	TRANSISTOR		
	Q 915	2SC2785	TRANSISTOR		
	Q 916	2SC2785	TRANSISTOR		
	R 1	QRD161J-102	C RESISTOR	1.0K 5% 1/4W	
	R 2	QRD161J-181	CARBON RESISTOR	180 5% 1/4W	
	R 2	QRD161J-821	C RESISTOR	820 5% 1/4W	A,C,J,U,UB,
	R 2	QRD161J-821	C RESISTOR	820 5% 1/4W	US,UT,UX
	R 3	QRD161J-101	C RESISTOR	100 5% 1/4W	
	R 10	QRD161J-152	C RESISTOR	1.5K 5% 1/4W	B,E,EE,EN
	R 10	QRD161J-102	C RESISTOR	1.0K 5% 1/4W	US,UT,UX
	R 10	QRD161J-102	C RESISTOR	1.0K 5% 1/4W	A,C,J,U,UB,
	R 12	QRD161J-102	C RESISTOR	1.0K 5% 1/4W	
	R 13	QRD161J-104	C RESISTOR	100K 5% 1/4W	
	R 15	QRD161J-103	C RESISTOR	10K 5% 1/4W	B,E,EE,EN
	R 16	QRD161J-103	C RESISTOR	10K 5% 1/4W	B,E,EE,EN
	R 20	QRD161J-331	C RESISTOR	330 5% 1/4W	
	R 21	QRD161J-224	C RESISTOR	220K 5% 1/4W	
	R 22	QRD161J-331	C RESISTOR	330 5% 1/4W	
	R 23	QRD161J-270	CARBON RESISTOR	27 5% 1/4W	A,C,J,U,UB,
	R 23	QRD161J-270	CARBON RESISTOR	27 5% 1/4W	US,UT,UX
	R 24	QRD161J-271	CARBON RESISTOR	270 5% 1/4W	
	R 25	QRD161J-473	C RESISTOR	47K 5% 1/4W	
	R 26	QRD161J-273	C RESISTOR	27K 5% 1/4W	
	R 27	QRD161J-223	C RESISTOR	22K 5% 1/4W	
	R 29	QRD161J-473	C RESISTOR	47K 5% 1/4W	
	R 30	QRD161J-103	C RESISTOR	10K 5% 1/4W	
	R 31	QRD161J-103	C RESISTOR	10K 5% 1/4W	
	R 32	QRD161J-363	CARBON RESISTOR	36K 5% 1/4W	
	R 34	QRD161J-222	C RESISTOR	2.2K 5% 1/4W	
	R 35	QRD161J-222	C RESISTOR	2.2K 5% 1/4W	
	R 36	QRD161J-103	C RESISTOR	10K 5% 1/4W	
	R 37	QRD167J-562	C RESISTOR	5.6K 5% 1/4W	
	R 38	QRD161J-392	C RESISTOR	3.9K 5% 1/4W	
	R 39	QRD161J-392	C RESISTOR	3.9K 5% 1/4W	
	R 40	QRD161J-560	C RESISTOR	56 5% 1/4W	US,UT,UX
	R 40	QRD161J-560	C RESISTOR	56 5% 1/4W	A,C,J,U,UB,
	R 42	QRD161J-102	C RESISTOR	1.0K 5% 1/4W	
	R 43	QRD161J-102	C RESISTOR	1.0K 5% 1/4W	
	R 44	QRD161J-102	C RESISTOR	1.0K 5% 1/4W	
	R 45	QRD161J-102	C RESISTOR	1.0K 5% 1/4W	
	R 46	QRD161J-104	C RESISTOR	100K 5% 1/4W	
	R 47	QRD161J-103	C RESISTOR	10K 5% 1/4W	
	R 48	QRD161J-331	C RESISTOR	330 5% 1/4W	
	R 49	QRD161J-102	C RESISTOR	1.0K 5% 1/4W	
	R 52	QRD161J-472	C RESISTOR	4.7K 5% 1/4W	
	R 54	QRD161J-472	C RESISTOR	4.7K 5% 1/4W	
	R 55	QRD161J-182	C RESISTOR	1.8K 5% 1/4W	
	R 56	QRD167J-332	C RESISTOR	3.3K 5% 1/4W	

BLOCK NO. 02

⚠	REF.	PARTS NO.	PARTS NAME	REMARKS	SUFFIX
	R 57	QRD161J-102	C RESISTOR	1.0K 5% 1/4W	
	R 58	QRD167J-562	C RESISTOR	5.6K 5% 1/4W	US,UT,UX
	R 58	QRD167J-562	C RESISTOR	5.6K 5% 1/4W	A,C,J,U,UB,
	R 59	QRD167J-562	C RESISTOR	5.6K 5% 1/4W	US,UT,UX
	R 59	QRD167J-562	C RESISTOR	5.6K 5% 1/4W	A,C,J,U,UB,
	R 60	QRD161J-102	C RESISTOR	1.0K 5% 1/4W	B,E,EE,EN
	R 61	QRD161J-102	C RESISTOR	1.0K 5% 1/4W	B,E,EE,EN
	R 64	QRD161J-473	C RESISTOR	47K 5% 1/4W	
	R 65	QRD161J-222	C RESISTOR	2.2K 5% 1/4W	
	R 66	QRD161J-222	C RESISTOR	2.2K 5% 1/4W	
	R 69	QRD161J-103	C RESISTOR	10K 5% 1/4W	
	R 70	QRD161J-393	C RESISTOR	39K 5% 1/4W	B,E,EN
	R 71	QRD161J-823	C RESISTOR	82K 5% 1/4W	B,E,EN
	R 72	QRD161J-122	C RESISTOR	1.2K 5% 1/4W	B,E,EN
	R 73	QRD161J-222	C RESISTOR	2.2K 5% 1/4W	B,E,EN
	R 74	QRD167J-332	C RESISTOR	3.3K 5% 1/4W	B,E,EN
	R 75	QRD161J-822	C RESISTOR	8.2K 5% 1/4W	B,E,EN
	R 93	QRZ9044-335	COMP.RESISTOR	3.3M 1/0W	C,J
	R 94	QRZ9044-335	COMP.RESISTOR	3.3M 1/0W	C,J
	R 101	QRD161J-114	C.RES. I.M	110K 5% 1/4W	
	R 102	QRD161J-102	C RESISTOR	1.0K 5% 1/4W	
	R 103	QRD161J-223	C RESISTOR	100 5% 1/4W	A,U,UB,
	R 103	QRD161J-223	C RESISTOR	100 5% 1/4W	US,UT,UX
	R 103	QRD161J-101	C RESISTOR	100 5% 1/4W	B,E,EE,EN
	R 103	QRD161J-101	C RESISTOR	100 5% 1/4W	C,J
	R 104	QRD161J-393	C RESISTOR	39K 5% 1/4W	
	R 107	QRD161J-104	C RESISTOR	100K 5% 1/4W	
	R 108	QRD161J-362	CARBON RESISTOR	3.6K 5% 1/4W	
	R 109	QRD161J-303Y	CARBON RESISTOR	30K 5% 1/4W	
	R 110	QRD161J-184	C RESISTOR	180K 5% 1/4W	
	R 111	QRD161J-563	C RESISTOR	56K 5% 1/4W	
	R 112	QRD161J-102	C RESISTOR	1.0K 5% 1/4W	
	R 113	QRD161J-104	C RESISTOR	100K 5% 1/4W	
	R 114	QRD161J-105	C RESISTOR	1.0M 5% 1/4W	
	R 116	QRD161J-124	C RESISTOR	120K 5% 1/4W	
	R 117	QRD161J-222	C RESISTOR	2.2K 5% 1/4W	
	R 118	QRD161J-222	C RESISTOR	2.2K 5% 1/4W	
	R 119	QRD161J-822	C RESISTOR	8.2K 5% 1/4W	
	R 120	QRD161J-822	C RESISTOR	8.2K 5% 1/4W	
	R 121	QRD161J-102	C RESISTOR	1.0K 5% 1/4W	
	R 122	QRD161J-472	C RESISTOR	4.7K 5% 1/4W	
	R 123	QRD161J-474	C RESISTOR	470K 5% 1/4W	
	R 124	QRD161J-472	C RESISTOR	4.7K 5% 1/4W	
	R 125	QRD161J-103	C RESISTOR	10K 5% 1/4W	
	R 130	QRD161J-184	C RESISTOR	180K 5% 1/4W	
	R 131	QRD161J-472	C RESISTOR	4.7K 5% 1/4W	A,U,UB,
	R 131	QRD161J-472	C RESISTOR	4.7K 5% 1/4W	US,UT,UX
	R 201	QRD161J-114	C.RES. I.M	110K 5% 1/4W	
	R 202	QRD161J-102	C RESISTOR	1.0K 5% 1/4W	
	R 203	QRD161J-223	C RESISTOR	22K 5% 1/4W	A,U,UB,
	R 203	QRD161J-223	C RESISTOR	22K 5% 1/4W	US,UT,UX
	R 203	QRD161J-101	C RESISTOR	100 5% 1/4W	B,E,EE,EN,C,J
	R 204	QRD161J-333	C RESISTOR	33K 5% 1/4W	
	R 207	QRD161J-104	C RESISTOR	100K 5% 1/4W	
	R 208	QRD161J-362	CARBON RESISTOR	3.6K 5% 1/4W	

BLOCK NO. 02

⚠	REF.	PARTS NO.	PARTS NAME	REMARKS	SUFFIX
	R 209	QRD161J-303Y	CARBON RESISTOR	30K 5% 1/4W	
	R 210	QRD161J-184	C RESISTOR	180K 5% 1/4W	
	R 211	QRD161J-563	C RESISTOR	56K 5% 1/4W	
	R 212	QRD161J-102	C RESISTOR	1.0K 5% 1/4W	
	R 213	QRD161J-104	C RESISTOR	100K 5% 1/4W	
	R 214	QRD161J-105	C RESISTOR	1.0M 5% 1/4W	
	R 216	QRD161J-124	C RESISTOR	120K 5% 1/4W	
	R 217	QRD161J-222	C RESISTOR	2.2K 5% 1/4W	
	R 218	QRD161J-222	C RESISTOR	2.2K 5% 1/4W	
	R 219	QRD161J-822	C RESISTOR	8.2K 5% 1/4W	
	R 220	QRD161J-822	C RESISTOR	8.2K 5% 1/4W	
	R 221	QRD161J-102	C RESISTOR	1.0K 5% 1/4W	
	R 222	QRD161J-472	C RESISTOR	4.7K 5% 1/4W	
	R 223	QRD161J-103	C RESISTOR	10K 5% 1/4W	
	R 224	QRD161J-472	C RESISTOR	4.7K 5% 1/4W	
	R 225	QRD161J-103	C RESISTOR	10K 5% 1/4W	
	R 230	QRD161J-184	C RESISTOR	180K 5% 1/4W	
	R 231	QRD161J-472	C RESISTOR	4.7K 5% 1/4W	A,U,UB,
	R 231	QRD161J-472	C RESISTOR	4.7K 5% 1/4W	US,UT,UX
	R 300	QRD161J-334	C RESISTOR	330K 5% 1/4W	
	R 301	QRD161J-473	C RESISTOR	47K 5% 1/4W	
	R 302	QRD161J-184	C RESISTOR	180K 5% 1/4W	
	R 303	QRD161J-224	C RESISTOR	220K 5% 1/4W	
	R 304	QRD161J-124	C RESISTOR	120K 5% 1/4W	
	R 305	QRD161J-102	C RESISTOR	1.0K 5% 1/4W	
	R 306	QRD161J-102	C RESISTOR	1.0K 5% 1/4W	
	R 307	QRD161J-222	C RESISTOR	2.2K 5% 1/4W	
	R 308	QRD161J-152	C RESISTOR	1.5K 5% 1/4W	
	R 309	QRD161J-101	C RESISTOR	100 5% 1/4W	
	R 310	QRD161J-223	C RESISTOR	22K 5% 1/4W	
	R 311	QRD161J-124	C RESISTOR	120K 5% 1/4W	
	R 313	QRD161J-302	CARBON RESISTOR	3.0K 5% 1/4W	
	R 315	QRD161J-222	C RESISTOR	2.2K 5% 1/4W	
	R 316	QRD161J-474	C RESISTOR	470K 5% 1/4W	
	R 318	QRD161J-104	C RESISTOR	100K 5% 1/4W	
	R 320	QRD161J-104	C RESISTOR	100K 5% 1/4W	
	R 321	QRD161J-102	C RESISTOR	1.0K 5% 1/4W	A,U,UB,
	R 321	QRD161J-102	C RESISTOR	1.0K 5% 1/4W	US,UT,UX
	R 323	QRD161J-221	C RESISTOR	220 5% 1/4W	US,UT,UX
	R 323	QRD161J-221	C RESISTOR	220 5% 1/4W	A,U,UB,
	R 327	QRD161J-223	C RESISTOR	22K 5% 1/4W	
	R 328	QRD161J-223	C RESISTOR	22K 5% 1/4W	
	R 330	QRD167J-562	C RESISTOR	5.6K 5% 1/4W	A,U,UB,
	R 330	QRD167J-562	C RESISTOR	5.6K 5% 1/4W	US,UT,UX
	R 331	QRD167J-562	C RESISTOR	5.6K 5% 1/4W	A,U,UB,
	R 331	QRD167J-562	C RESISTOR	5.6K 5% 1/4W	US,UT,UX
	R 340	QRD161J-513	C RESISTOR	51K 5% 1/4W	A,U,UB,
	R 340	QRD161J-513	C RESISTOR	51K 5% 1/4W	US,UT,UX
	R 347	QRD161J-153	C RESISTOR	15K 5% 1/4W	
	R 350	QRD161J-223	C RESISTOR	22K 5% 1/4W	
	R 353	QRD161J-823	C RESISTOR	82K 5% 1/4W	
	R 354	QRD161J-823	C RESISTOR	82K 5% 1/4W	
	R 355	QRD161J-105	C RESISTOR	1.0M 5% 1/4W	
	R 356	QRD161J-105	C RESISTOR	1.0M 5% 1/4W	
	R 357	QRD161J-102	C RESISTOR	1.0K 5% 1/4W	

BLOCK NO. 02

⚠	REF.	PARTS NO.	PARTS NAME	REMARKS	SUFFIX
	R 358	QRD161J-102	C RESISTOR	1.0K 5% 1/4W	
	R 361	QRD167J-562	C RESISTOR	5.6K 5% 1/4W	
	R 362	QRD161J-103	C RESISTOR	10K 5% 1/4W	US,UT,UX
	R 362	QRD161J-103	C RESISTOR	10K 5% 1/4W	A,U,UB,
	R 363	QRD161J-473	C RESISTOR	47K 5% 1/4W	A,U,UB,
	R 363	QRD161J-473	C RESISTOR	47K 5% 1/4W	US,UT,UX
	R 364	QRD161J-563	C RESISTOR	56K 5% 1/4W	A,U,UB,
	R 364	QRD161J-563	C RESISTOR	56K 5% 1/4W	US,UT,UX
	R 365	QRD161J-223	C RESISTOR	22K 5% 1/4W	A,U,UB,
	R 365	QRD161J-223	C RESISTOR	22K 5% 1/4W	US,UT,UX
	R 380	QRD161J-225	C RESISTOR	2.2M 5% 1/4W	
	R 381	QRD161J-473	C RESISTOR	47K 5% 1/4W	
	R 382	QRD161J-220	C RESISTOR	22 5% 1/4W	
	R 383	QRD161J-104	C RESISTOR	100K 5% 1/4W	
	R 399	QRD161J-101	C RESISTOR	100 5% 1/4W	A,U,UB,
	R 399	QRD161J-101	C RESISTOR	100 5% 1/4W	US,UT,UX
	R 400	QRD167J-682	C RESISTOR	6.8K 5% 1/4W	A,U,UB,
	R 400	QRD167J-682	C RESISTOR	6.8K 5% 1/4W	US,UT,UX
	R 401	QRD161J-473	C RESISTOR	47K 5% 1/4W	A,U,UB,
	R 401	QRD161J-473	C RESISTOR	47K 5% 1/4W	US,UT,UX
	R 402	QRD161J-103	C RESISTOR	10K 5% 1/4W	A,U,UB,
	R 402	QRD161J-103	C RESISTOR	10K 5% 1/4W	UT,US,UX
	R 917	QRD161J-101	C RESISTOR	100 5% 1/4W	
	R 918	QRD161J-104	C RESISTOR	100K 5% 1/4W	
	R 919	QRD161J-390	CARBON RESISTOR	39 5% 1/4W	
	R 920	QRD161J-102	C RESISTOR	1.0K 5% 1/4W	
	R 921	QRD161J-392	C RESISTOR	3.9K 5% 1/4W	
	R 922	QRD161J-103	C RESISTOR	10K 5% 1/4W	
	R 923	QRD161J-151	CARBON RESISTOR	150 5% 1/4W	
	R 924	QRZ0077-220X	F.RES. I.M	22 1/0W	B,E,EE,EN
	R 924	QRZ0077-220X	F.RES. I.M	22 1/0W	US,UT,UX
	R 924	QRZ0077-220X	F.RES. I.M	22 1/0W	A,U,UB,
	R 925	QRD161J-473	C RESISTOR	47K 5% 1/4W	
	R 926	QRD161J-561	C RESISTOR	560 5% 1/4W	
	R 927	QRD161J-223	C RESISTOR	22K 5% 1/4W	
	R 928	QRD167J-682	C RESISTOR	6.8K 5% 1/4W	
	R 929	QRD167J-332	C RESISTOR	3.3K 5% 1/4W	
	R 930	QRD167J-682	C RESISTOR	6.8K 5% 1/4W	
	R 979	QRD161J-471	C RESISTOR	470 5% 1/4W	
	R 980	QRD161J-104	C RESISTOR	100K 5% 1/4W	
	T 1	VQT7A21-113	IFT		
	TU 1	QAU0034-001	FRONT END		B,E,EN
	TU 1	QAU0036-001	FRONT END		EE
	TU 1	QAU0037-001	FRONT END		A,C,J,U,UB,
	TU 1	QAU0037-001	FRONT END		US,UT,UX
	X 1	QAX0402-001	CRYSTAL		

■ Electrical Parts List (System Micon & Operation Switch)

BLOCK NO. 03

⚠	REF.	PARTS NO.	PARTS NAME	REMARKS	SUFFIX
	C 461	QER50JM-476	E.CAPA. I.M	47MF 20% 6.3V	
	C 462	QCGB1HK-102	C CAPACITOR	1000PF 10% 50V	
	C 463	QCVB1CN-103Y	C CAPACITOR	.010MF 30% 16V	
	C 464	QCVB1CN-103Y	C CAPACITOR	.010MF 30% 16V	
	C 701	QEK51HM-226	E.CAPA. I.M	22MF 20% 50V	
	C 702	QEK51HM-226	E.CAPA. I.M	22MF 20% 50V	
	C 703	QFV71HJ-124ZM	TF CAPACITOR	.12MF 5% 50V	
	C 704	QCBB1HK-151Y	C.CAPACITOR	150PF 10% 50V	
	C 705	QCBB1HK-151Y	C.CAPACITOR	150PF 10% 50V	
	C 708	QCBB1HK-151Y	C.CAPACITOR	150PF 10% 50V	
	C 709	QCGB1HK-102	C CAPACITOR	1000PF 10% 50V	
	C 713	QCGB1HK-102	C CAPACITOR	1000PF 10% 50V	
	C 714	QCGB1HK-102	C CAPACITOR	1000PF 10% 50V	
	C 715	QER41CM-106	E.CAPACITOR	10MF 20% 16V	
	C 716	QER41HM-105	E.CAPACITOR	1.0MF 20% 50V	
	C 717	QETN0JM-108Z	E CAPACITOR	1000MF 20% 6.3V	
	C 718	QEK60JM-107ZM	E.CAPACITOR	100MF 20% 6.3V	
	C 719	QCGB1HK-102	C CAPACITOR	1000PF 10% 50V	
	C 720	QCS11HJ-220	C.CAPACITOR	22PF 5% 50V	
	C 721	QCS11HJ-220	C.CAPACITOR	22PF 5% 50V	
	C 722	QCGB1HK-102	C CAPACITOR	1000PF 10% 50V	
	C 723	QCS31HJ-390Z	C.CAPACITOR	39PF 5% 50V	
	C 724	QCS11HJ-180	C.CAPACITOR	18PF 5% 50V	
	C 725	QCS11HJ-220	C.CAPACITOR	22PF 5% 50V	
	C 726	QCS31HJ-390Z	C.CAPACITOR	39PF 5% 50V	
	C 727	QCGB1HK-102	C CAPACITOR	1000PF 10% 50V	
	C 728	QCGB1HK-102	C CAPACITOR	1000PF 10% 50V	
	C 730	QCGB1HK-102	C CAPACITOR	1000PF 10% 50V	
	C 731	QCBB1HK-101Y	C.CAPACITOR	100PF 10% 50V	
	C 735	QEK61CM-476	E.CAPACITOR	47MF 20% 16V	
	C 737	QCBB1HK-151Y	C.CAPACITOR	150PF 10% 50V	
	C 739	QCVB1CN-103Y	C.CAPACITOR	.010MF 30% 16V	
	C 840	QCGB1HK-102	C CAPACITOR	1000PF 10% 50V	
	C 841	QCGB1HK-102	C CAPACITOR	1000PF 10% 50V	
	C 842	QCGB1HK-102	C CAPACITOR	1000PF 10% 50V	
	C 843	QCGB1HK-102	C CAPACITOR	1000PF 10% 50V	B,E,EN
	C 844	QCGB1HK-102	C CAPACITOR	1000PF 10% 50V	B,E,EN
	C 845	QCGB1HK-102	C CAPACITOR	1000PF 10% 50V	B,E,EN
	C 846	QCGB1HK-102	C CAPACITOR	1000PF 10% 50V	B,E,EN
	C 850	QETC1HM-224Z	E.CAPA. I.M	.22MF 20% 50V	US,UT,UX
	C 850	QETC1HM-224Z	E.CAPA. I.M	.22MF 20% 50V	A,U,UB,
	C 851	EETB1HM-475E	E.CAPA. I.M		A,U,UB,
	C 851	EETB1HM-475E	E.CAPA. I.M		US,UT,UX
	C 852	EETB1AM-107E	E.CAPA. I.M		A,U,UB,
	C 852	EETB1AM-107E	E.CAPA. I.M		US,UT,UX
	C 853	QFV41HJ-104ZM	TF CAPACITOR	.10MF 5% 50V	A,U,UB,
	C 853	QFV41HJ-104ZM	TF CAPACITOR	.10MF 5% 50V	US,UT,UX
	C 854	QCBB1HK-101Y	C.CAPACITOR	100PF 10% 50V	US,UT,UX
	C 854	QCBB1HK-101Y	C.CAPACITOR	100PF 10% 50V	A,U,UB,
	C 855	QCVB1CN-103Y	C CAPACITOR	.010MF 30% 16V	US,UT,UX
	C 855	QCVB1CN-103Y	C CAPACITOR	.010MF 30% 16V	A,U,UB,
	C 856	QCXB1CM-472Y	C.CAPACITOR	4700PF 20% 16V	A,U,UB,
	C 856	QCXB1CM-472Y	C.CAPACITOR	4700PF 20% 16V	US,UT,UX
	C 857	EETC1HM-226ZE	E.CAPA. I.M		A,U,UB,
	C 857	EETC1HM-226ZE	E.CAPA. I.M		US,UT,UX

BLOCK NO. 03

⚠	REF.	PARTS NO.	PARTS NAME	REMARKS	SUFFIX
	C 858	QCVB1CN-103Y	C CAPACITOR	.010MF 30% 16V	A,U,UB,
	C 858	QCVB1CN-103Y	C CAPACITOR	.010MF 30% 16V	US,UT,UX
	C 859	QCXB1CM-332Y	C.CAPACITOR	3300PF 20% 16V	US,UT,UX
	C 859	QCXB1CM-332Y	C.CAPACITOR	3300PF 20% 16V	A,U,UB,
	C 860	QFV71HJ-474ZM	FILM CAPACITOR	.47MF 5% 50V	A,U,UB,
	C 860	QFV71HJ-474ZM	FILM CAPACITOR	.47MF 5% 50V	US,UT,UX
	C 861	QCVB1CN-103Y	C CAPACITOR	.010MF 30% 16V	A,U,UB,
	C 861	QCVB1CN-103Y	C CAPACITOR	.010MF 30% 16V	US,UT,UX
	C 862	QETC1HM-225ZM	E.CAPA. I.M	2.2MF 20% 50V	A,U,UB,
	C 862	QETC1HM-225ZM	E.CAPA. I.M	2.2MF 20% 50V	US,UT,UX
	C 873	QETN1AM-227Z	E CAPACITOR	220MF 20% 10V	A,U,UB,
	C 873	QETN1AM-227Z	E CAPACITOR	220MF 20% 10V	US,UT,UX
	C 874	EETB1AM-107E	E.CAPA. I.M		US,UT,UX
	C 874	EETB1AM-107E	E.CAPA. I.M		A,U,UB,
	C 875	EETB1HM-475E	E.CAPA. I.M		A,U,UB,
	C 875	EETB1HM-475E	E.CAPA. I.M		US,UT,UX
	C 876	QCBB1HK-151Y	C.CAPACITOR	150PF 10% 50V	US,UT,UX
	C 876	QCBB1HK-151Y	C.CAPACITOR	150PF 10% 50V	A,U,UB,
	C 878	QCBB1HK-151Y	C.CAPACITOR	150PF 10% 50V	A,U,UB,
	C 878	QCBB1HK-151Y	C.CAPACITOR	150PF 10% 50V	US,UT,UX
	C 879	QCBB1HK-331Y	C.CAPACITOR	330PF 10% 50V	A,U,UB,
	C 879	QCBB1HK-331Y	C.CAPACITOR	330PF 10% 50V	US,UT,UX
	C 880	QETC1HM-225ZM	E.CAPA. I.M	2.2MF 20% 50V	A,U,UB,
	C 880	QETC1HM-225ZM	E.CAPA. I.M	2.2MF 20% 50V	US,UT,UX
	CN701	VMC0163-R11	CONNECTOR		
	CN702	VMC0163-R13	CONNECTOR		
	D 412	SLR-342MCA47	LED I.M		
	D 413	SLR-342MCA47	LED I.M		
	D 414	SLR-342MCA47	LED I.M		
	D 415	SLR-342MCA47	LED I.M		
	D 701	1SS133-T2	DIODE		
	D 702	1SS133-T2	DIODE		
	D 703	1SS133-T2	DIODE		
	D 704	1SS133-T2	DIODE		
	D 705	MTZ5.1JAT-77	ZENER DIODE		
	D 706	1SS133-T2	DIODE		
	D 707	SLA-380LT	LED		
	D 707	SLR-342VC-T	L.E.D.		
	D 850	MTZ5.1B	ZENER DIODE		A,U,UB,
	D 850	MTZ5.1B	ZENER DIODE		US,UT,UX
	D 851	1SS133-T2	DIODE		US,UT,UX
	D 851	1SS133-T2	DIODE		A,U,UB,
	FL701	QLF0021-001	FL TUBE		
	FW701	VWSC06-103K3K	EF FLAT WIRE		
	FW701	VWSC06-093K3K	EF FLAT WIRE		
	FW702	VWSC06-103K3K	EF FLAT WIRE		
	FW702	VWSC06-103K3K	EF FLAT WIRE		
	FW851	EWR35D-39LS	FLAT WIRE		
	FW851	EWR35D-39LS	FLAT WIRE		
	FW852	EWR35D-30LS	FLAT WIRE		A,U,UB,
	FW852	EWR35D-30LS	FLAT WIRE		UT,US,UX
	FW852	EWR35D-30LS	FLAT WIRE		A,U,UB,
	FW852	EWR35D-30LS	FLAT WIRE		US,UT,UX
	IC404	GP1U261X	IR DETECT UNIT		
	IC701	UPD78044FGF-067	IC		

BLOCK NO. 03

⚠	REF.	PARTS NO.	PARTS NAME	REMARKS	SUFFIX
	IC851	BU9253AS	IC		A,U,UB,
	IC851	BU9253AS	IC		US,UT,UX
	IC852	BA15218N	IC		A,U,UB,
	IC852	BA15218N	IC		US,UT,UX
	J 850	QNS0032-001	JACK		
	J 851	QNS0080-001	MIC JAC	6.3JACK	US,UT,UX
	J 851	QNS0080-001	MIC JAC	6.3JACK	A,U,UB,
	J 852	QNS0080-001	MIC JAC	6.3JACK	A,U,UB,
	J 852	QNS0080-001	MIC JAC	6.3JACK	US,UT,UX
	JS701	QSW0538-001	ROTARY ENCODER		
	L 701	VQP0026-470Z	INDUCTOR		
	L 702	VQP0026-470Z	INDUCTOR		
	L 703	QQL29BJ-100Z	INDUCTOR		
	L 704	VQP0018-4R7	INDUCTOR I.M		
	L 705	VQP0018-4R7	INDUCTOR I.M		
	L 706	QQL29BJ-100Z	INDUCTOR I.M		
	L 707	QQL29BJ-100Z	INDUCTOR I.M		
	L 708	VQP0018-220	INDUCTOR I.M		
	L 709	VQZ0048-009	INDUCTOR		
	L 840	EQL4007-2R2T	INDUCTOR I.M		
	L 841	VQP0018-470	INDUCTOR		B,E,EN
	L 842	VQP0018-470	INDUCTOR		B,E,EN
	Q 470	DTC114ESA-T	D.TR.I.M		
	Q 471	DTC114ESA-T	D.TR.I.M		
	Q 472	DTA114ES	D.TR.I.M		
	Q 473	DTA114ES	D.TR.I.M		
	Q 474	DTC114ESA-T	D.TR.I.M		
	Q 703	2SC2785	TRANSISTOR		
	Q 704	DTC114TSA-T	D.TRANSISTOR		
	Q 705	2SA1175	TR.I.M		
	Q 706	2SC2668(O)	TR TAPE		
	Q 707	2SC2668(O)	TR TAPE		
	Q 708	2SC2785	TRANSISTOR		
	Q 709	2SC2785	TRANSISTOR		
	Q 711	2SD2144S(VW)	TR I/M		
	Q 771	2SC945A	TRANSISTOR		
	Q 772	2SC945A	TRANSISTOR		
	Q 773	2SC945A	TRANSISTOR		
	Q 774	DTC114ESA-T	D.TR.I.M		
	Q 850	DTC144ESA-T	TRANSISTOR		US,UT,UX
	Q 850	DTC144ESA-T	TRANSISTOR		A,U,UB,
	Q 851	2SD2144S(VW)	TR I/M		US,UT,UX
	Q 851	2SD2144S(VW)	TR I/M		A,U,UB,
	R 470	QRD161J-202	C RESISTOR	2.0K 5% 1/4W	
	R 471	QRD161J-752	C RESISTOR	7.5K 5% 1/4W	
	R 472	QRD161J-392	C RESISTOR	3.9K 5% 1/4W	
	R 473	QRD167J-562	C RESISTOR	5.6K 5% 1/4W	
	R 474	QRD161J-103	C RESISTOR	10K 5% 1/4W	
	R 475	QRD161J-183	C RESISTOR	18K 5% 1/4W	
	R 476	QRD161J-122	C RESISTOR	1.2K 5% 1/4W	
	R 477	QRD161J-152	C RESISTOR	1.5K 5% 1/4W	
	R 478	QRD161J-222	C RESISTOR	2.2K 5% 1/4W	
	R 479	QRD161J-473	C RESISTOR	47K 5% 1/4W	B,E,EN,C,J
	R 480	QRD161J-392	C RESISTOR	3.9K 5% 1/4W	
	R 481	QRD167J-562	C RESISTOR	5.6K 5% 1/4W	

BLOCK NO. 03

⚠	REF.	PARTS NO.	PARTS NAME	REMARKS	SUFFIX
	R 482	QRD161J-103	C RESISTOR	10K 5% 1/4W	
	R 483	QRD161J-183	C RESISTOR	18K 5% 1/4W	
	R 484	QRD161J-473	C RESISTOR	47K 5% 1/4W	
	R 485	QRD161J-272	C RESISTOR	2.7K 5% 1/4W	
	R 486	QRD161J-271	CARBON RESISTOR	270 5% 1/4W	
	R 487	QRD161J-271	CARBON RESISTOR	270 5% 1/4W	
	R 488	QRD167J-121	C RESISTOR	120 5% 1/4W	
	R 489	QRD167J-121	C RESISTOR	120 5% 1/4W	
	R 490	QRD161J-472	C RESISTOR	4.7K 5% 1/4W	
	R 690	QRD161J-102	C RESISTOR	1.0K 5% 1/4W	
	R 691	QRD161J-102	C RESISTOR	1.0K 5% 1/4W	
	R 692	QRD161J-122	C RESISTOR	1.2K 5% 1/4W	
	R 693	QRD161J-152	C RESISTOR	1.5K 5% 1/4W	
	R 694	QRD161J-222	C RESISTOR	2.2K 5% 1/4W	
	R 695	QRD161J-272	C RESISTOR	2.7K 5% 1/4W	
	R 696	QRD161J-392	C RESISTOR	3.9K 5% 1/4W	
	R 697	QRD167J-562	C RESISTOR	5.6K 5% 1/4W	
	R 698	QRD161J-753	CARBON RESISTOR	75K 5% 1/4W	B,E,EE,EN
	R 699	QRD161J-103	C RESISTOR	10K 5% 1/4W	EE
	R 700	QRD161J-103	C RESISTOR	10K 5% 1/4W	
	R 701	QRD161J-222	C RESISTOR	2.2K 5% 1/4W	
	R 702	QRD161J-222	C RESISTOR	2.2K 5% 1/4W	
	R 703	QRD161J-222	C RESISTOR	2.2K 5% 1/4W	
	R 704	QRD161J-222	C RESISTOR	2.2K 5% 1/4W	
	R 705	QRD161J-222	C RESISTOR	2.2K 5% 1/4W	
	R 707	QRD161J-102	C RESISTOR	1.0K 5% 1/4W	
	R 708	QRD161J-222	C RESISTOR	2.2K 5% 1/4W	
	R 709	QRD161J-222	C RESISTOR	2.2K 5% 1/4W	
	R 710	QRD161J-222	C RESISTOR	2.2K 5% 1/4W	
	R 711	QRD161J-222	C RESISTOR	2.2K 5% 1/4W	
	R 712	QRD161J-222	C RESISTOR	2.2K 5% 1/4W	
	R 713	QRD161J-222	C RESISTOR	2.2K 5% 1/4W	
	R 714	QRD161J-222	C RESISTOR	2.2K 5% 1/4W	
	R 715	QRD161J-222	C RESISTOR	2.2K 5% 1/4W	
	R 716	QRD161J-222	C RESISTOR	2.2K 5% 1/4W	
	R 717	QRD161J-222	C RESISTOR	2.2K 5% 1/4W	
	R 718	QRD161J-222	C RESISTOR	2.2K 5% 1/4W	
	R 719	QRD161J-222	C RESISTOR	2.2K 5% 1/4W	
	R 720	QRD161J-222	C RESISTOR	2.2K 5% 1/4W	
	R 721	QRD161J-102	C RESISTOR	1.0K 5% 1/4W	
	R 722	QRD161J-222	C RESISTOR	2.2K 5% 1/4W	
	R 723	QRD161J-222	C RESISTOR	2.2K 5% 1/4W	
	R 724	QRD161J-222	C RESISTOR	2.2K 5% 1/4W	
	R 725	QRD161J-222	C RESISTOR	2.2K 5% 1/4W	
	R 726	QRD161J-222	C RESISTOR	2.2K 5% 1/4W	
	R 727	QRD161J-102	C RESISTOR	1.0K 5% 1/4W	
	R 728	QRD161J-222	C RESISTOR	2.2K 5% 1/4W	
	R 729	QRD161J-102	C RESISTOR	1.0K 5% 1/4W	
	R 730	QRD161J-222	C RESISTOR	2.2K 5% 1/4W	
	R 731	QRD161J-102	C RESISTOR	1.0K 5% 1/4W	
	R 732	QRD161J-222	C RESISTOR	2.2K 5% 1/4W	
	R 733	QRD161J-222	C RESISTOR	2.2K 5% 1/4W	
	R 736	QRD161J-222	C RESISTOR	2.2K 5% 1/4W	
	R 737	QRD161J-222	C RESISTOR	2.2K 5% 1/4W	
	R 738	QRD161J-224	C RESISTOR	220K 5% 1/4W	

BLOCK NO. 03

⚠	REF.	PARTS NO.	PARTS NAME	REMARKS	SUFFIX
	R 739	QRD161J-103	C RESISTOR	10K 5% 1/4W	
	R 740	QRD161J-224	C RESISTOR	220K 5% 1/4W	
	R 741	QRD161J-103	C RESISTOR	10K 5% 1/4W	
	R 742	QRD161J-224	C RESISTOR	220K 5% 1/4W	
	R 743	QRD161J-103	C RESISTOR	10K 5% 1/4W	
	R 744	QRD161J-103	C RESISTOR	10K 5% 1/4W	
	R 745	QRD161J-473	C RESISTOR	47K 5% 1/4W	
	R 747	QRD161J-102	C RESISTOR	1.0K 5% 1/4W	
	R 748	QRD161J-103	C RESISTOR	10K 5% 1/4W	
	R 750	QRD161J-103	C RESISTOR	10K 5% 1/4W	
	R 752	QRD161J-103	C RESISTOR	10K 5% 1/4W	
	R 753	QRD161J-222	C RESISTOR	2.2K 5% 1/4W	
	R 754	QRD161J-472	C RESISTOR	4.7K 5% 1/4W	
	R 755	QRD161J-823	C RESISTOR	82K 5% 1/4W	
	R 756	QRD161J-823	C RESISTOR	82K 5% 1/4W	
	R 757	QRD161J-103	C RESISTOR	10K 5% 1/4W	
	R 758	QRD161J-103	C RESISTOR	10K 5% 1/4W	
	R 759	QRD161J-273	C RESISTOR	27K 5% 1/4W	
	R 760	QRD161J-563	C RESISTOR	56K 5% 1/4W	
	R 761	QRD161J-103	C RESISTOR	10K 5% 1/4W	
	R 762	QRD161J-104	C RESISTOR	100K 5% 1/4W	
	R 764	QRD161J-273	C RESISTOR	27K 5% 1/4W	
	R 765	QRD161J-331	C RESISTOR	330 5% 1/4W	
	R 766	QRD161J-102	C RESISTOR	1.0K 5% 1/4W	
	R 767	QRD161J-102	C RESISTOR	1.0K 5% 1/4W	
	R 768	QRD161J-222	C RESISTOR	2.2K 5% 1/4W	
	R 769	QRD161J-222	C RESISTOR	2.2K 5% 1/4W	
	R 770	QRD161J-223	C RESISTOR	22K 5% 1/4W	
	R 771	QRD161J-223	C RESISTOR	22K 5% 1/4W	
	R 772	QRD161J-103	C RESISTOR	10K 5% 1/4W	
	R 773	QRD161J-103	C RESISTOR	10K 5% 1/4W	
	R 774	QRD161J-472	C RESISTOR	4.7K 5% 1/4W	
	R 775	QRD161J-331	C RESISTOR	330 5% 1/4W	
	R 776	QRD161J-103	C RESISTOR	10K 5% 1/4W	
	R 777	QRD161J-102	C RESISTOR	1.0K 5% 1/4W	
	R 778	QRD161J-224	C RESISTOR	220K 5% 1/4W	
	R 779	QRD161J-105	C RESISTOR	1.0M 5% 1/4W	
	R 780	QRD161J-472	C RESISTOR	4.7K 5% 1/4W	
	R 781	QRD161J-822	C RESISTOR	8.2K 5% 1/4W	
	R 782	QRD161J-822	C RESISTOR	8.2K 5% 1/4W	
	R 783	QRD161J-472	C RESISTOR	4.7K 5% 1/4W	
	R 784	QRD161J-222	C RESISTOR	2.2K 5% 1/4W	
	R 785	QRD161J-103	C RESISTOR	10K 5% 1/4W	
	R 786	QRD161J-103	C RESISTOR	10K 5% 1/4W	
	R 787	QRD161J-103	C RESISTOR	10K 5% 1/4W	
	R 788	QRD161J-222	C RESISTOR	2.2K 5% 1/4W	
	R 789	QRD161J-222	C RESISTOR	2.2K 5% 1/4W	
	R 790	QRD161J-222	C RESISTOR	2.2K 5% 1/4W	
	R 791	QRD161J-102	C RESISTOR	1.0K 5% 1/4W	
	R 792	QRD161J-102	C RESISTOR	1.0K 5% 1/4W	
	R 793	QRD161J-102	C RESISTOR	1.0K 5% 1/4W	
	R 794	QRD161J-222	C RESISTOR	2.2K 5% 1/4W	
	R 795	QRD161J-152	C RESISTOR	1.5K 5% 1/4W	
	R 796	QRD161J-222	C RESISTOR	2.2K 5% 1/4W	
	R 797	QRD161J-301	C.RES. I.M	300 5% 1/4W	

BLOCK NO. 03

⚠	REF.	PARTS NO.	PARTS NAME	REMARKS	SUFFIX
	R 797	QRD161J-301	C.RES. I.M	300 5% 1/4W	
	R 799	QRD161J-301	C.RES. I.M	300 5% 1/4W	
	R 800	QRD161J-103	C RESISTOR	10K 5% 1/4W	
	R 802	QRD161J-472	C RESISTOR	4.7K 5% 1/4W	
	R 803	QRD161J-473	C RESISTOR	47K 5% 1/4W	
	R 804	QRD161J-823	C RESISTOR	82K 5% 1/4W	
	R 805	QRD161J-823	C RESISTOR	82K 5% 1/4W	
	R 806	QRD161J-394	C RESISTOR	390K 5% 1/4W	
	R 807	QRD161J-394	C RESISTOR	390K 5% 1/4W	
	R 808	QRD161J-104	C RESISTOR	100K 5% 1/4W	
	R 809	QRD161J-104	C RESISTOR	100K 5% 1/4W	
	R 840	QRD161J-472	C.RESISTOR	4.7K 5% 1/4W	US,UT,UX
	R 840	QRD161J-472	C.RESISTOR	4.7K 5% 1/4W	A,U,UB,
	R 841	QRD161J-472	C.RESISTOR	4.7K 5% 1/4W	A,U,UB,
	R 841	QRD161J-472	C.RESISTOR	4.7K 5% 1/4W	US,UT,UX
	R 850	QRD161J-123	C.RESISTOR	12K 5% 1/4W	A,U,UB,
	R 850	QRD161J-123	C.RESISTOR	12K 5% 1/4W	US,UT,UX
	R 851	QRD161J-123	C.RESISTOR	12K 5% 1/4W	A,U,UB,
	R 851	QRD161J-123	C.RESISTOR	12K 5% 1/4W	US,UT,UX
	R 852	QRD161J-393	C.RESISTOR	39K 5% 1/4W	US,UT,UX
	R 852	QRD161J-393	C.RESISTOR	39K 5% 1/4W	A,U,UB,
	R 853	QRD161J-103	C.RESISTOR	10K 5% 1/4W	A,U,UB,
	R 853	QRD161J-103	C.RESISTOR	10K 5% 1/4W	US,UT,UX
	R 854	QRD161J-203	C.RESISTOR	20K 5% 1/4W	A,U,UB,
	R 854	QRD161J-203	C.RESISTOR	20K 5% 1/4W	US,UT,UX
	R 855	QRD161J-822	C.RESISTOR	8.2K 5% 1/4W	US,UT,UX
	R 855	QRD161J-822	C.RESISTOR	8.2K 5% 1/4W	A,U,UB,
	R 856	QRD161J-203	C.RESISTOR	20K 5% 1/4W	A,U,UB,
	R 856	QRD161J-203	C.RESISTOR	20K 5% 1/4W	US,UT,UX
	R 857	QRD161J-153	C RESISTOR	15K 5% 1/4W	A,U,UB,
	R 857	QRD161J-153	C RESISTOR	15K 5% 1/4W	US,UT,UX
	R 858	QRD161J-103	C RESISTOR	10K 5% 1/4W	A,U,UB,
	R 858	QRD161J-103	C RESISTOR	10K 5% 1/4W	US,UT,UX
	R 859	QRD161J-472	C.RESISTOR	4.7K 5% 1/4W	A,U,UB,
	R 859	QRD161J-472	C.RESISTOR	4.7K 5% 1/4W	US,UT,UX
	R 860	QRD161J-392	C.RESISTOR	3.9K 5% 1/4W	US,UT,UX
	R 860	QRD161J-392	C.RESISTOR	3.9K 5% 1/4W	A,U,UB,
	R 864	QRD161J-103	C.RESISTOR	10K 5% 1/4W	US,UT,UX
	R 864	QRD161J-103	C.RESISTOR	10K 5% 1/4W	A,U,UB,
	R 865	QRD161J-123	C.RESISTOR	12K 5% 1/4W	A,U,UB,
	R 865	QRD161J-123	C.RESISTOR	12K 5% 1/4W	US,UT,UX
	R 866	QRD161J-391	C.RESISTOR	390 5% 1/4W	A,U,UB,
	R 866	QRD161J-391	C.RESISTOR	390 5% 1/4W	US,UT,UX
	R 867	QRD161J-152	C RESISTOR	1.5K 5% 1/4W	A,U,UB,
	R 867	QRD161J-152	C RESISTOR	1.5K 5% 1/4W	US,UT,UX
	R 868	QRD161J-475	C RESISTOR	4.7M 5% 1/4W	US,UT,UX
	R 868	QRD161J-475	C RESISTOR	4.7M 5% 1/4W	A,U,UB,
	R 869	QRD161J-560	C RESISTOR	56 5% 1/4W	A,U,UB,
	R 869	QRD161J-560	C RESISTOR	56 5% 1/4W	US,UT,UX
	R 870	QRD161J-273	C.RESISITOR	27K 5% 1/4W	US,UT,UX
	R 870	QRD161J-273	C.RESISITOR	27K 5% 1/4W	A,U,UB,
	R 873	QRD161J-102	C.RESISITOR	1.0K 5% 1/4W	A,U,UB,
	R 873	QRD161J-102	C.RESISITOR	1.0K 5% 1/4W	US,UT,UX
	R 874	QRD161J-561	C.RESISITOR	560 5% 1/4W	US,UT,UX
	R 874	QRD161J-561	C.RESISITOR	560 5% 1/4W	A,U,UB,

BLOCK NO. 03

⚠	REF.	PARTS NO.	PARTS NAME	REMARKS	SUFFIX
	R 875	QRD161J-472	C.RESISITOR	4.7K 5% 1/4W	US,UT,UX
	R 875	QRD161J-472	C.RESISITOR	4.7K 5% 1/4W	A,U,UB,
	R 876	QRD161J-221	C RESISITOR	220 5% 1/4W	A,U,UB,
	R 876	QRD161J-221	C RESISITOR	220 5% 1/4W	US,UT,UX
	R 877	QRD167J-682	C RESISITOR	6.8K 5% 1/4W	A,U,UB,
	R 877	QRD167J-682	C RESISITOR	6.8K 5% 1/4W	US,UT,UX
	R 878	QRD161J-103	C RESISITOR	10K 5% 1/4W	A,U,UB,
	R 878	QRD161J-103	C RESISITOR	10K 5% 1/4W	US,UT,UX
	R 879	QRD161J-152	C RESISITOR	1.5K 5% 1/4W	A,U,UB,
	R 879	QRD161J-152	C RESISITOR	1.5K 5% 1/4W	US,UT,UX
	R 880	QRD161J-221	C RESISITOR	220 5% 1/4W	US,UT,UX
	R 880	QRD161J-221	C RESISITOR	220 5% 1/4W	A,U,UB,
	R 881	QRD161J-823	C RESISITOR	82K 5% 1/4W	US,UT,UX
	R 881	QRD161J-823	C RESISITOR	82K 5% 1/4W	A,U,UB,
	RA700	QRB139J-224	NET RESISTOR	220K 5% 1/3W	
	RA701	QRB149J-224	R.NETWORK	220K 5% 1/4W	
	S 404	QSW0674-001Z	TACT SWITCH		
	S 405	QSW0674-001Z	TACT SWITCH		
	S 406	QSW0674-001Z	TACT SWITCH		
	S 407	QSW0674-001Z	TACT SWITCH		
	S 408	QSW0674-001Z	TACT SWITCH		
	S 409	QSW0674-001Z	TACT SWITCH		
	S 415	QSW0674-001Z	TACT SWITCH		
	S 422	QSW0674-001Z	TACT SWITCH		
	S 423	QSW0674-001Z	TACT SWITCH		
	S 424	QSW0674-001Z	TACT SWITCH		
	S 425	QSW0674-001Z	TACT SWITCH		
	S 426	QSW0674-001Z	TACT SWITCH		
	S 700	QSW0674-001Z	TACT SWITCH		
	S 701	QSW0674-001Z	TACT SWITCH		
	S 702	QSW0674-001Z	TACT SWITCH		
	S 703	QSW0674-001Z	TACT SWITCH		
	S 704	QSW0674-001Z	TACT SWITCH		
	S 705	QSW0674-001Z	TACT SWITCH		
	S 706	QSW0674-001Z	TACT SWITCH		
	S 707	QSW0674-001Z	TACT SWITCH		
	S 708	QSW0674-001Z	TACT SWITCH		
	S 709	QSW0674-001Z	TACT SWITCH		
	S 710	QSW0674-001Z	TACT SWITCH		
	S 711	QSW0674-001Z	TACT SWITCH		
	S 712	QSW0674-001Z	TACT SWITCH		
	S 713	QSW0674-001Z	TACT SWITCH		
	SP701	VYH7653-001	IC HOLDER		
	VR840	QVQ0045-B54	V RESISITOR	MIC JACK	US,UT,UX
	VR840	QVQ0045-B54	V RESISITOR	MIC JACK	A,U,UB,UR
	X 701	VCX5000-002	CRYSTAL		
	X 702	QAX0410-001Z	CERA LOCK		
	CN700	QGF1205F1-11	CONNECTOR		

■ Electrical Parts List (CD Servo Control)

BLOCK NO. 04

⚠	REF.	PARTS NO.	PARTS NAME	REMARKS	SUFFIX
	C 604	QEK61AM-107ZM	E CAPACITOR	100MF 20% 10V	
	C 605	EETB1EM-106E	E.CAPA. I.M		
	C 606	QCGB1HK-102	C CAPACITOR	1000PF 10% 50V	
	C 607	QCGB1HK-102	C CAPACITOR	1000PF 10% 50V	
	C 608	EETB1HM-105E	E.CAPA. I.M		
	C 609	QCBB1HK-101Y	C.CAPACITOR	100PF 10% 50V	
	C 610	QFLC1HJ-273ZM	M CAPACITOR	.027MF 5% 50V	
	C 611	QCXB1CM-222Y	C CAPACITOR	2200PF 20% 16V	
	C 612	QCVB1CN-103Y	C CAPACITOR	.010MF 30% 16V	
	C 613	QCBB1HK-331Y	C.CAPACITOR	330PF 10% 50V	
	C 614	QFLC1HJ-104ZM	M CAPACITOR	.10MF 5% 50V	
	C 615	QCFB1HZ-223	C CAP I M	.022MF +80:-20% 50V	
	C 616	QCFB1HZ-223	C CAP I M	.022MF +80:-20% 50V	
	C 617	QCFB1HZ-223	C CAP I M	.022MF +80:-20% 50V	
	C 618	QCXB1CM-222Y	C CAPACITOR	2200PF 20% 16V	
	C 619	QCBB1HK-271Y	C.CAPACITOR	270PF 10% 50V	
	C 620	QCS11HJ-470	C.CAPACITOR	47PF 5% 50V	
	C 621	QCBB1HK-821Y	C CAPACITOR	820PF 10% 50V	
	C 622	EETB1AM-476E	E.CAPA. I.M		
	C 623	QFLC1HJ-104ZM	M CAPACITOR	.10MF 5% 50V	
	C 628	QCC11EM-473V	C CAPACITOR	.047MF 20% 25V	
	C 629	EETB1AM-107E	E.CAPA. I.M		
	C 631	QET41AM-477	E CAPACITOR	470MF 20% 10V	
	C 632	QEK61AM-107ZM	E CAPACITOR	100MF 20% 10V	
	C 651	QCS11HJ-120	C.CAPACITOR	12PF 5% 50V	
	C 652	QCS11HJ-150	C.CAPACITOR	15PF 5% 50V	
	C 653	QCFB1HZ-223	C CAP I M	.022MF +80:-20% 50V	
	C 655	QCC11EM-473V	C CAPACITOR	.047MF 20% 25V	
	C 661	QCBB1HK-471Y	C.CAPACITOR	470PF 10% 50V	
	C 662	QCFB1HZ-223	C CAP I M	.022MF +80:-20% 50V	
	C 663	QFLC1HJ-223ZM	M CAPACITOR	.022MF 5% 50V	
	C 664	QCFB1HZ-223	C CAP I M	.022MF +80:-20% 50V	
	C 665	QFV71HJ-334ZM	FILM CAPACITOR	.33MF 5% 50V	
	C 671	QCXB1CM-222Y	C CAPACITOR	2200PF 20% 16V	
	C 672	QCXB1CM-222Y	C CAPACITOR	2200PF 20% 16V	
	C 673	QET41AM-227	E CAPACITOR	220MF 20% 10V	
	C 674	QCFB1HZ-223	C CAP I M	.022MF +80:-20% 50V	
	C 675	QCGB1HK-102	C CAPACITOR	1000PF 10% 50V	
	C 676	QCGB1HK-102	C CAPACITOR	1000PF 10% 50V	
	C 691	QCBB1HK-151Y	C CAPACITOR	150PF 10% 50V	
	C 692	QCBB1HK-151Y	C CAPACITOR	150PF 10% 50V	
	C 693	QCBB1HK-151Y	C CAPACITOR	150PF 10% 50V	
	C 694	QCBB1HK-151Y	C CAPACITOR	150PF 10% 50V	
	C 698	QCGB1HK-102	C CAPACITOR	1000PF 10% 50V	
	CN601	QGF1008F1-15	21-41 CONNECTOR		
	CN601	QGF1008F1-15	21-41 CONNECTOR		
	CN601	EMV7144-015R	15PIN CONNECTOR		
	CN602	VMC0075-006	6P PLUG ASSY		
	CN603	VMC0163-R07	CONNECTOR		
	CN604	VMC0163-R11	CONNECTOR		
	CN605	VMC0041-003	CONNECTOR		
	D 661	1SS133	SI DIODE		
	IC601	AN8806SB	IC		
	IC602	BA6897FP-W	IC		
	IC603	MN35510	IC		

BLOCK NO. 04

⚠	REF.	PARTS NO.	PARTS NAME	REMARKS	SUFFIX
	Q 601	2SA952(L,K)	TRANSISTOR		
	Q 631	2SA952(L,K)	TRANSISTOR		
	R 601	QRD161J-123	C RESISTOR	12K 5% 1/4W	
	R 603	QRD161J-125	C.RES. I.M	1.2M 5% 1/4W	
	R 605	QRD167J-134	C.RES. I.M	130K 5% 1/4W	
	R 606	QRD161J-913	C.RES. I.M	91K 5% 1/4W	
	R 607	QRD161J-273	C RESISTOR	27K 5% 1/4W	
	R 609	QRD161J-114	C.RES. I.M	110K 5% 1/4W	
	R 610	QRD161J-154	C RESISTOR	150K 5% 1/4W	
	R 612	QRD161J-103	C RESISTOR	10K 5% 1/4W	
	R 613	QRD167J-121	C RESISTOR	120 5% 1/4W	
	R 614	QRD161J-100	C RESISTOR	10 5% 1/4W	
	R 615	QRD161J-120	C RESISTOR	12 5% 1/4W	
	R 616	QRD161J-910Y	C RESISTOR	91 5% 1/4W	
	R 621	QRD161J-330	C RESISTOR	33 5% 1/4W	
	R 622	QRD161J-330	C RESISTOR	33 5% 1/4W	
	R 623	QRD161J-330	C RESISTOR	33 5% 1/4W	
	R 631	QRD161J-331	C RESISTOR	330 5% 1/4W	
	R 632	QRD161J-101	C RESISTOR	100 5% 1/4W	
	R 633	QRD161J-273	C RESISTOR	27K 5% 1/4W	
	R 641	QRD161J-563	C RESISTOR	56K 5% 1/4W	
	R 642	QRD161J-123	C RESISTOR	12K 5% 1/4W	
	R 643	QRD161J-822	C RESISTOR	8.2K 5% 1/4W	
	R 644	QRD161J-223	C RESISTOR	22K 5% 1/4W	
	R 645	QRD161J-223	C RESISTOR	22K 5% 1/4W	
	R 646	QRD161J-182	C RESISTOR	1.8K 5% 1/4W	
	R 647	QRD167J-562	C RESISTOR	5.6K 5% 1/4W	
	R 651	QRD161J-102	C RESISTOR	1.0K 5% 1/4W	
	R 652	QRD161J-102	C RESISTOR	1.0K 5% 1/4W	
	R 653	QRD161J-471	C RESISTOR	470 5% 1/4W	
	R 653	QRD161J-471	C RESISTOR	470 5% 1/4W	
	R 654	QRD161J-102	C RESISTOR	1.0K 5% 1/4W	
	R 655	QRD161J-471	C RESISTOR	470 5% 1/4W	
	R 659	QRD161J-471	C RESISTOR	470 5% 1/4W	
	R 661	QRD161J-104	C RESISTOR	100K 5% 1/4W	
	R 663	QRD161J-124	C RESISTOR	120K 5% 1/4W	
	R 664	QRD161J-681	C RESISTOR	680 5% 1/4W	
	R 666	QRD161J-220	C RESISTOR	22 5% 1/4W	
	R 671	QRD161J-102	C RESISTOR	1.0K 5% 1/4W	
	R 672	QRD161J-102	C RESISTOR	1.0K 5% 1/4W	
	X 651	VCX5016-934V	CRYSTAL		

■ Electrical Parts List (CD Select Switch P.C.B.)

Block No. 5

⚠	Item	Parts Number	Description	Area
		OTHERS		
	CN804	VMC0289-S07	CONNECTOR	
	SW1	QSEC001-E03	SWITCH	
	SW2	QSEC001-E03	SWITCH	
	SW3	QSEC001-E03	SWITCH	
	SW4	QSEC001-E03	SWITCH	
	SW5	QSEC001-E03	SWITCH	
	SW6	QSEC001-E03	SWITCH	

■ Electrical Parts List (Changer Control P.C.B.)

Block No. 6

⚠	Item	Parts Number	Description	Area
		I.C.S		
	IC801	UPD65612GB-208	I.C(M)	
	IC802	TA8409S	I.C(MONO-ANALOG)	
	IC803	TA8409S	I.C(MONO-ANALOG)	
		CAPACITORS		
	C801	QEK51AM-107	AL E.CAP.	
	C802	QEK51EM-475	AL E.CAP.	
	C803	QFLB1HJ-102	1000PF 50V MYLAR CAP.	
	C804	QCFB1HZ-104Y	0.1MF 50V CER.CAP.	
	C805	QCVB1CM-103Y	0.01MF 16V CER.CAP.	
	C806	QEK51CM-476	AL E.CAP.	
	C807	QEK51CM-476	AL E.CAP.	
	C808	QFLB1HJ-102	1000PF 50V MYLAR CAP.	
	C810	QCZ0205-155	1.5MF 25V C.CAP.	
	C811	QCZ0205-155	1.5MF 25V C.CAP.	
	C813	QCVB1CM-103Y	0.01MF 16V CER.CAP.	
	C821	QCBB1HK-102Y	1000PF 50V CER.CAP.	
		RESISTORS		
	R805	QRD161J-102	1K 1/6W CARBON RES.	
	R806	QRD161J-471	470 1/6W CARBON RES.	
	R807	QRD161J-471	470 1/6W CARBON RES.	
	R808	QRD161J-102	1K 1/6W CARBON RES.	
	R810	QRD161J-684	680K 1/6W CARBON RES.	
	R811	QRD161J-105	1M 1/6W CARBON RES.	
	R813	QRD161J-102	1K 1/6W CARBON RES.	
	R814	QRD161J-102	1K 1/6W CARBON RES.	
	R815	QRD161J-102	1K 1/6W CARBON RES.	
	R816	QRD161J-102	1K 1/6W CARBON RES.	
	R817	QRD161J-102	1K 1/6W CARBON RES.	
	R818	QRD161J-102	1K 1/6W CARBON RES.	
	R819	QRD161J-102	1K 1/6W CARBON RES.	
	R820	QRD161J-102	1K 1/6W CARBON RES.	
	R821	QRD161J-102	1K 1/6W CARBON RES.	
	R822	QRD161J-102	1K 1/6W CARBON RES.	
	R823	QRD161J-102	1K 1/6W CARBON RES.	
	R824	QRD161J-102	1K 1/6W CARBON RES.	
	R825	QRD161J-102	1K 1/6W CARBON RES.	
	R826	QRD161J-102	1K 1/6W CARBON RES.	
	R827	QRD161J-102	1K 1/6W CARBON RES.	
	R828	QRD161J-102	1K 1/6W CARBON RES.	
	R829	QRD161J-102	1K 1/6W CARBON RES.	
	R830	QRD161J-102	1K 1/6W CARBON RES.	
	R832	QRD161J-181	180 1/6W CARBON RES.	
	R833	QRD161J-102	1K 1/6W CARBON RES.	
	R834	QRD161J-102	1K 1/6W CARBON RES.	
	R839	QRD167J-332	3.3K 1/6W CARBON RES.	
	R840	QRD167J-562	5.6K 1/6W CARBON RES.	
		OTHERS		
		VMW1377-004A	PW BOARD	
		SBSF2608Z	TAPPING SCREW	
		VYH7237-001SS	IC HOLDER	
	L801	VQP0018-100	INDUCTOR	
	L802	VQP0033-100Z	INDUCTOR	
	L803	VQP0033-100Z	INDUCTOR	
	L804	VQP0033-100Z	INDUCTOR	
	CN801	VMC0163-R10	CONNECT TERMINAL	
	CN802	VMC0289-S07	CONNECT TERMINAL	
	CN803	VMC0324-12310	CONNECT TERMINAL	

■ Electrical Parts List (Head Amplifier & Mechanism Control)

BLOCK NO. 07

⚠	REF.	PARTS NO.	PARTS NAME	REMARKS	SUFFIX
	C 101	NCS21HJ-561AY	C.CAPA. C.M	560PF 5% 50V	
	C 102	NCS21HJ-331AY	C CAPACITOR	330PF 5% 50V	
	C 103	NCS21HJ-561AY	C.CAPA. C.M	560PF 5% 50V	
	C 104	NCS21HJ-221AY	C CAPACITOR	220PF 5% 50V	
	C 105	QEK40JM-227	E.CAPACITOR	220MF 20% 6.3V	
	C 106	NCB21HK-333AY	C CAPACITOR	.033MF 10% 50V	
	C 107	QEK41EM-475	E.CAPACITOR	4.7MF 20% 25V	
	C 108	NCB21HK-393AY	C CAPACITOR	.039MF 10% 50V	
	C 109	NCB21HK-563AY	C CAPACITOR	.056MF 10% 50V	
	C 110	NCS21HJ-221AY	C CAPACITOR	220PF 5% 50V	
	C 111	QEK41HM-104	E.CAPACITOR	.10MF 20% 50V	
	C 112	QEK41CM-106	E CAPACITOR	10MF 20% 16V	
	C 113	NCB21HK-332AY	C CAPACITOR	3300PF 10% 50V	
	C 114	QEK41EM-475	E.CAPACITOR	4.7MF 20% 25V	
	C 115	NCB21HK-153AY	C CAPACITOR	.015MF 10% 50V	
	C 116	NCB21HK-822AY	C CAPACITOR	8200PF 10% 50V	
	C 117	NCB21HK-223AY	C CAPACITOR	.022MF 10% 50V	
	C 118	NCB21HK-103AY	C CAPACITOR	.010MF 10% 50V	
	C 119	NCB21HK-563AY	C CAPACITOR	.056MF 10% 50V	
	C 120	NCS21HJ-330AY	C CAPACITOR	33PF 5% 50V	
	C 201	NCS21HJ-561AY	C.CAPA. C.M	560PF 5% 50V	
	C 202	NCS21HJ-331AY	C CAPACITOR	330PF 5% 50V	
	C 203	NCS21HJ-561AY	C.CAPA. C.M	560PF 5% 50V	
	C 204	NCS21HJ-221AY	C CAPACITOR	220PF 5% 50V	
	C 205	QEK40JM-227	E.CAPACITOR	220MF 20% 6.3V	
	C 206	NCB21HK-333AY	C CAPACITOR	.033MF 10% 50V	
	C 207	QEK41EM-475	E.CAPACITOR	4.7MF 20% 25V	
	C 208	NCB21HK-393AY	C CAPACITOR	.039MF 10% 50V	
	C 209	NCB21HK-563AY	C CAPACITOR	.056MF 10% 50V	
	C 210	NCS21HJ-221AY	C CAPACITOR	220PF 5% 50V	
	C 211	QEK41HM-104	E.CAPACITOR	.10MF 20% 50V	
	C 212	QEK41CM-106	E CAPACITOR	10MF 20% 16V	
	C 213	NCB21HK-332AY	C CAPACITOR	3300PF 10% 50V	
	C 214	QEK41EM-475	E.CAPACITOR	4.7MF 20% 25V	
	C 215	NCB21HK-153AY	C CAPACITOR	.015MF 10% 50V	
	C 216	NCB21HK-822AY	C CAPACITOR	8200PF 10% 50V	
	C 217	NCB21HK-223AY	C CAPACITOR	.022MF 10% 50V	
	C 218	NCB21HK-103AY	C CAPACITOR	.010MF 10% 50V	
	C 219	NCB21HK-563AY	C CAPACITOR	.056MF 10% 50V	
	C 220	NCS21HJ-330AY	C CAPACITOR	33PF 5% 50V	
	C 301	QEK41CM-106	E CAPACITOR	10MF 20% 16V	
	C 302	QEK41CM-476	E.CAPACITOR	47MF 20% 16V	
	C 303	QEK41CM-226	E CAPACITOR	22MF 20% 16V	
	C 304	QEK41EM-475	E.CAPACITOR	4.7MF 20% 25V	
	C 305	NCB21HK-393AY	C CAPACITOR	.039MF 10% 50V	
	C 306	QEK40JM-227	E.CAPACITOR	220MF 20% 6.3V	
	C 308	NCB21HK-562AY	C CAPACITOR	5600PF 10% 50V	
	C 309	NCB21HK-562AY	C CAPACITOR	5600PF 10% 50V	
	C 310	NCB21HK-223AY	C CAPACITOR	.022MF 10% 50V	
	C 311	NCB21HK-682AY	C.CAPA. C.M	6800PF 10% 50V	
	C 313	QEKF1AM-107ZN	E.CAPACITOR	100MF 20% 10V	
	C 314	QCZ0205-155	ML.C.CAPACITOR	1.5MF	
	C 315	QCZ0205-155	ML.C.CAPACITOR	1.5MF	
	C 316	QFG32AJ-103ZN	PP CAPACITOR	.010MF 5% 100V	
	C 318	NCB21HK-103AY	C CAPACITOR	.010MF 10% 50V	

BLOCK NO. 07

⚠	REF.	PARTS NO.	PARTS NAME	REMARKS	SUFFIX
	C 319	QFG32AJ-821ZN	TF CAPACITOR	820PF 5% 100V	
	C 321	NCB21HK-103AY	C CAPACITOR	.010MF 10% 50V	
	C 322	QFG32AJ-152ZN	M CAPACITOR	1500PF 5% 100V	
	C 327	QEK41CM-476	E.CAPACITOR	47MF 20% 16V	
	C 328	NCS21HJ-151AY	C CAPACITOR	150PF 5% 50V	
	C 329	NCS21HJ-151AY	C CAPACITOR	150PF 5% 50V	
	C 330	NCS21HJ-151AY	C CAPACITOR	150PF 5% 50V	
	C 332	NCS21HJ-151AY	C CAPACITOR	150PF 5% 50V	
	C 335	NCB21HK-103AY	C CAPACITOR	.010MF 10% 50V	
	C 336	NCB21HK-103AY	C CAPACITOR	.010MF 10% 50V	
	C 337	NCB21HK-103AY	C CAPACITOR	.010MF 10% 50V	
	C 338	NCB21HK-103AY	C CAPACITOR	.010MF 10% 50V	
	C 339	QEK41CM-476	E.CAPACITOR	47MF 20% 16V	
	C 340	NCB21HK-103AY	C CAPACITOR	.010MF 10% 50V	
	C 341	QEKF1AM-107ZN	E.CAPACITOR	100MF 20% 10V	
	C 342	QEK41EM-475	E.CAPACITOR	4.7MF 20% 25V	
	C 343	QET41CM-106	E.CAPACITOR	10MF 20% 16V	
	C 344	NCB21HK-472AY	C CAPACITOR	4700PF 10% 50V	
	C 345	NCS21HJ-331AY	C CAPACITOR	330PF 5% 50V	
	CN301	VMC0163-R06	CONNECTOR		
	CN302	VMC0163-R06	CONNECTOR		
	CN303	QGB2011M1-10	PWB CONECTOR		
	CN304	QGB2011M1-10	PWB CONECTOR		
	CN305	VMC0163-R10	CONNECTOR		
	CN306	VMC0163-R11	CONNECTOR		
	D 301	MA704A	S.K.DIODE		
	D 302	HSM2838C	DIODE		
	D 307	MA3051(M)	CHIP Z DIODE CM		
	D 308	MA3051(M)	CHIP Z DIODE CM		
	D 309	MA704A	S.K.DIODE		
	IC301	BA3126N	IC		
	IC302	AN7345K	IC		
	IC303	BU4094BCF-X	IC		
	IC304	BU4094BCF-X	IC		
	L 301	QQR0620-001	OSC COIL(BIAS)		
	L 303	VQP0033-100Z	INDUCTOR		
	Q 101	DTC114TKT146	TRANSISTOR		
	Q 102	DTC144TKA-X	TRANSISTOR		
	Q 103	DTC144EKA-X	TRANSISTOR		
	Q 104	DTC114TKT146	TRANSISTOR		
	Q 105	2SC2001(L,K)	TRANSISTOR		
	Q 201	DTC114TKT146	TRANSISTOR		
	Q 202	DTC144TKA-X	TRANSISTOR		
	Q 203	DTC144EKA-X	TRANSISTOR		
	Q 204	DTC114TKT146	TRANSISTOR		
	Q 205	2SC2001(L,K)	TRANSISTOR		
	Q 301	DTC144TKA-X	TRANSISTOR		
	Q 302	2SC2001(L,K)	TR I/M		
	Q 303	2SC2001(L,K)	TR I/M		
	Q 304	2SC2001(L,K)	TRANSISTOR		
	Q 305	2SC2001(L,K)	TRANSISTOR		
	Q 306	2SC1623(6)	TRANSISTOR		
	Q 307	2SC1623(6)	TRANSISTOR		
	Q 308	2SC1623(6)	TRANSISTOR		
	Q 309	2SC1623(6)	TRANSISTOR		

BLOCK NO. 07

⚠	REF.	PARTS NO.	PARTS NAME	REMARKS	SUFFIX
	Q 312	2SB562(C)	TRANSISTOR		
	Q 313	2SC1623(6)	TRANSISTOR		
	Q 314	2SB562(C)	TRANSISTOR		
	Q 315	2SC1623(6)	TRANSISTOR		
	Q 316	2SA952(L,K)	TRANSISTOR		
	Q 317	DTC124EK	TRANSISTOR		
	Q 318	DTA144EKA-X	TRANSISTOR		
	Q 319	DTC144EKA-X	TRANSISTOR		
	Q 320	DTC144EKA-X	TRANSISTOR		
	Q 321	DTC144EKA-X	TRANSISTOR		
	Q 322	DTC144EKA-X	TRANSISTOR		
	Q 323	2SC1623(6)	TRANSISTOR		
	R 102	NRSA02J-102NY	MG RESISTOR	1.0K 5% 1/10W	
	R 103	NRSA02J-183NY	MG RESISTOR	18K 5% 1/10W	
	R 105	NRSA02J-220NY	MG RESISTOR	22 5% 1/10W	
	R 106	NRSA02J-392NY	MG RESISTOR	3.9K 5% 1/10W	
	R 107	NRSA02J-123NY	RES. C.M	12K 5% 1/10W	
	R 108	NRSA02J-222NY	MG RESISTOR	2.2K 5% 1/10W	
	R 109	NRSA02J-152NY	MG RESISTOR	1.5K 5% 1/10W	
	R 110	NRSA02J-152NY	MG RESISTOR	1.5K 5% 1/10W	
	R 111	NRSA02J-562NY	MG RESISTOR	5.6K 5% 1/10W	
	R 112	NRSA02J-122NY	MG RESISTOR	1.2K 5% 1/10W	
	R 113	NRSA02J-271NY	MG RESISTOR	270 5% 1/10W	
	R 114	NRSA02J-391NY	MG RESISTOR	390 5% 1/10W	
	R 115	NRSA02J-332NY	MG RESISTOR	3.3K 5% 1/10W	
	R 116	NRSA02J-182NY	MG RESISTOR	1.8K 5% 1/10W	
	R 117	NRSA02J-332NY	MG RESISTOR	3.3K 5% 1/10W	
	R 118	NRSA02J-152NY	MG RESISTOR	1.5K 5% 1/10W	
	R 119	NRSA02J-203NY	MG RESISTOR	20K 5% 1/10W	
	R 120	NRSA02J-102NY	MG RESISTOR	1.0K 5% 1/10W	
	R 121	NRSA02J-122NY	MG RESISTOR	1.2K 5% 1/10W	
	R 202	NRSA02J-102NY	MG RESISTOR	1.0K 5% 1/10W	
	R 203	NRSA02J-183NY	MG RESISTOR	18K 5% 1/10W	
	R 205	NRSA02J-220NY	MG RESISTOR	22 5% 1/10W	
	R 206	NRSA02J-392NY	MG RESISTOR	3.9K 5% 1/10W	
	R 207	NRSA02J-123NY	RES. C.M	12K 5% 1/10W	
	R 208	NRSA02J-222NY	MG RESISTOR	2.2K 5% 1/10W	
	R 209	NRSA02J-152NY	MG RESISTOR	1.5K 5% 1/10W	
	R 210	NRSA02J-152NY	MG RESISTOR	1.5K 5% 1/10W	
	R 211	NRSA02J-562NY	MG RESISTOR	5.6K 5% 1/10W	
	R 212	NRSA02J-122NY	MG RESISTOR	1.2K 5% 1/10W	
	R 213	NRSA02J-271NY	MG RESISTOR	270 5% 1/10W	
	R 214	NRSA02J-391NY	MG RESISTOR	390 5% 1/10W	
	R 215	NRSA02J-332NY	MG RESISTOR	3.3K 5% 1/10W	
	R 216	NRSA02J-182NY	MG RESISTOR	1.8K 5% 1/10W	
	R 217	NRSA02J-332NY	MG RESISTOR	3.3K 5% 1/10W	
	R 218	NRSA02J-152NY	MG RESISTOR	1.5K 5% 1/10W	
	R 219	NRSA02J-203NY	MG RESISTOR	20K 5% 1/10W	
	R 220	NRSA02J-102NY	MG RESISTOR	1.0K 5% 1/10W	
	R 221	NRSA02J-122NY	MG RESISTOR	1.2K 5% 1/10W	
	R 301	NRS181J-221NY	MG RESISTOR	220 5% 1/8W	
	R 302	NRS181J-101NY	MG RESISTOR	100 5% 1/8W	
	R 304	NRSA02J-393NY	MG RESISTOR	39K 5% 1/10W	
	R 305	NRSA02J-103NY	MG RESISTOR	10K 5% 1/10W	
	R 306	NRSA02J-103NY	MG RESISTOR	10K 5% 1/10W	

BLOCK NO. 07

⚠	REF.	PARTS NO.	PARTS NAME	REMARKS	SUFFIX
	R 307	NRSA02J-103NY	MG RESISTOR	10K 5% 1/10W	
	R 308	NRSA02J-152NY	MG RESISTOR	1.5K 5% 1/10W	
	R 309	NRSA02J-152NY	MG RESISTOR	1.5K 5% 1/10W	
	R 310	NRS181J-820NY	MG RESISTOR	82 5% 1/8W	
	R 311	NRS181J-820NY	MG RESISTOR	82 5% 1/8W	
	R 313	NRSA02J-3R3NYM	RES. C.M	3.3 5% 1/10W	
	R 314	NRSA02J-223NY	MG RESISTOR	22K 5% 1/10W	
	R 315	NRSA02J-100NY	MG RESISTOR	10 5% 1/10W	
	R 316	NRSA02J-223NY	MG RESISTOR	22K 5% 1/10W	
	R 317	NRSA02J-100NY	MG RESISTOR	10 5% 1/10W	
	R 318	NRSA02J-123NY	RES. C.M	12K 5% 1/10W	
	R 319	NRSA02J-152NY	MG RESISTOR	1.5K 5% 1/10W	
	R 321	NRSA02J-123NY	RES. C.M	12K 5% 1/10W	
	R 322	NRSA02J-152NY	MG RESISTOR	1.5K 5% 1/10W	
	R 327	NRSA02J-474NY	MG RESISTOR	470K 5% 1/10W	
	R 328	NRSA02J-222NY	MG RESISTOR	2.2K 5% 1/10W	
	R 329	NRSA02J-222NY	MG RESISTOR	2.2K 5% 1/10W	
	R 330	NRSA02J-0R0NY	MG RESISTOR	5% 1/10W	
	R 335	NRSA02J-222NY	MG RESISTOR	2.2K 5% 1/10W	
	R 336	NRSA02J-392NY	MG RESISTOR	3.9K 5% 1/10W	
	R 338	NRSA02J-222NY	MG RESISTOR	2.2K 5% 1/10W	
	R 339	NRSA02J-222NY	MG RESISTOR	2.2K 5% 1/10W	
	R 341	NRSA02J-222NY	MG RESISTOR	2.2K 5% 1/10W	
	R 343	NRSA02J-0R0NY	MG RESISTOR	5% 1/10W	
	R 345	NRSA02J-222NY	MG RESISTOR	2.2K 5% 1/10W	
	R 346	NRSA02J-0R0NY	MG RESISTOR	5% 1/10W	
	R 347	NRSA02J-392NY	MG RESISTOR	3.9K 5% 1/10W	
	R 348	NRSA02J-222NY	MG RESISTOR	2.2K 5% 1/10W	
	R 350	NRSA02J-472NY	MG RESISTOR	4.7K 5% 1/10W	
	R 351	NRSA02J-151NY	MG RESISTOR	150 5% 1/10W	
	R 353	NRSA02J-472NY	MG RESISTOR	4.7K 5% 1/10W	
	R 354	NRSA02J-151NY	MG RESISTOR	150 5% 1/10W	
	R 355	NRSA02J-332NY	MG RESISTOR	3.3K 5% 1/10W	
	R 356	NRSA02J-103NY	MG RESISTOR	10K 5% 1/10W	
	R 357	NRSA02J-103NY	MG RESISTOR	10K 5% 1/10W	
	R 358	NRSA02J-123NY	RES. C.M	12K 5% 1/10W	
	R 359	NRSA02J-123NY	RES. C.M	12K 5% 1/10W	
	R 360	NRSA02J-433NYT	RES. C.M **	43K 5% 1/10W	
	R 361	NRSA02J-183NY	MG RESISTOR	18K 5% 1/10W	
	R 362	NRSA02J-123NY	RES. C.M	12K 5% 1/10W	
	R 363	NRSA02J-183NY	MG RESISTOR	18K 5% 1/10W	
	R 364	NRSA02J-433NYT	RES. C.M **	43K 5% 1/10W	
	R 365	NRSA02J-203NY	MG RESISTOR	20K 5% 1/10W	
	R 366	NRSA02J-123NY	RES. C.M	12K 5% 1/10W	
	R 367	NRSA02J-102NY	MG RESISTOR	1.0K 5% 1/10W	
	R 368	NRSA02J-391NY	MG RESISTOR	390 5% 1/10W	
	R 369	NRSA02J-391NY	MG RESISTOR	390 5% 1/10W	
	R 371	NRS181J-222NY	MG RESISTOR	2.2K 5% 1/8W	
	R 374	NRSA02J-912NY	RES. C.M	9.1K 5% 1/10W	
	R 375	NRSA02J-683NY	MG RESISTOR	68K 5% 1/10W	
	R 376	NRS181J-6R8NY	MG RESISTOR	6.8 5% 1/8W	
	VR101	QVPA603-503A	SEMI.V.RESISTOR		
	VR201	QVPA603-503A	SEMI.V.RESISTOR		
	VR301	QVPA603-103M	SEMI.V.RESISTOR		

■ Electrical Parts List (Reel pulse)

BLOCK NO. 08

⚠	REF.	PARTS NO.	PARTS NAME	REMARKS	SUFFIX
	CN 1	EMV7159-010	10P PLUG ASSY		
	D 1	1SR139-100	SI DIODE		
	IC 1	SG-105F3-BB/C	PHOTO SENSER		
	P 1	VMZ0015-002	POST PIN		
	SW 2	MXS00220MVL0	CASSETTE SWITCH	TAPE	
	SW 4	MXS00220MVL0	CASSETTE SWITCH	70U	
	SW 6	QSW0507-001	SWITCH		

■ Electrical Parts List (Reel pulse)

BLOCK NO. 09

⚠	REF.	PARTS NO.	PARTS NAME	REMARKS	SUFFIX
	CN 1	EMV7159-010	10P PLUG ASSY		
	D 1	1SR139-100	SI DIODE		
	IC 1	SG-105F3-BB/C	PHOTO SENSER		
	P 1	VMZ0015-002	POST PIN		
	SW 1	MXS00220MVL0	CASSETTE SWITCH	R.REC	
	SW 2	MXS00220MVL0	CASSETTE SWITCH	TAPE	
	SW 4	MXS00220MVL0	CASSETTE SWITCH	70U	
	SW 5	MXS00220MVL0	CASSETTE SWITCH	F.REC	
	SW 6	QSW0507-001	SWITCH		

Accessories and Packing Materials and Parts List

■ MX-PD302T

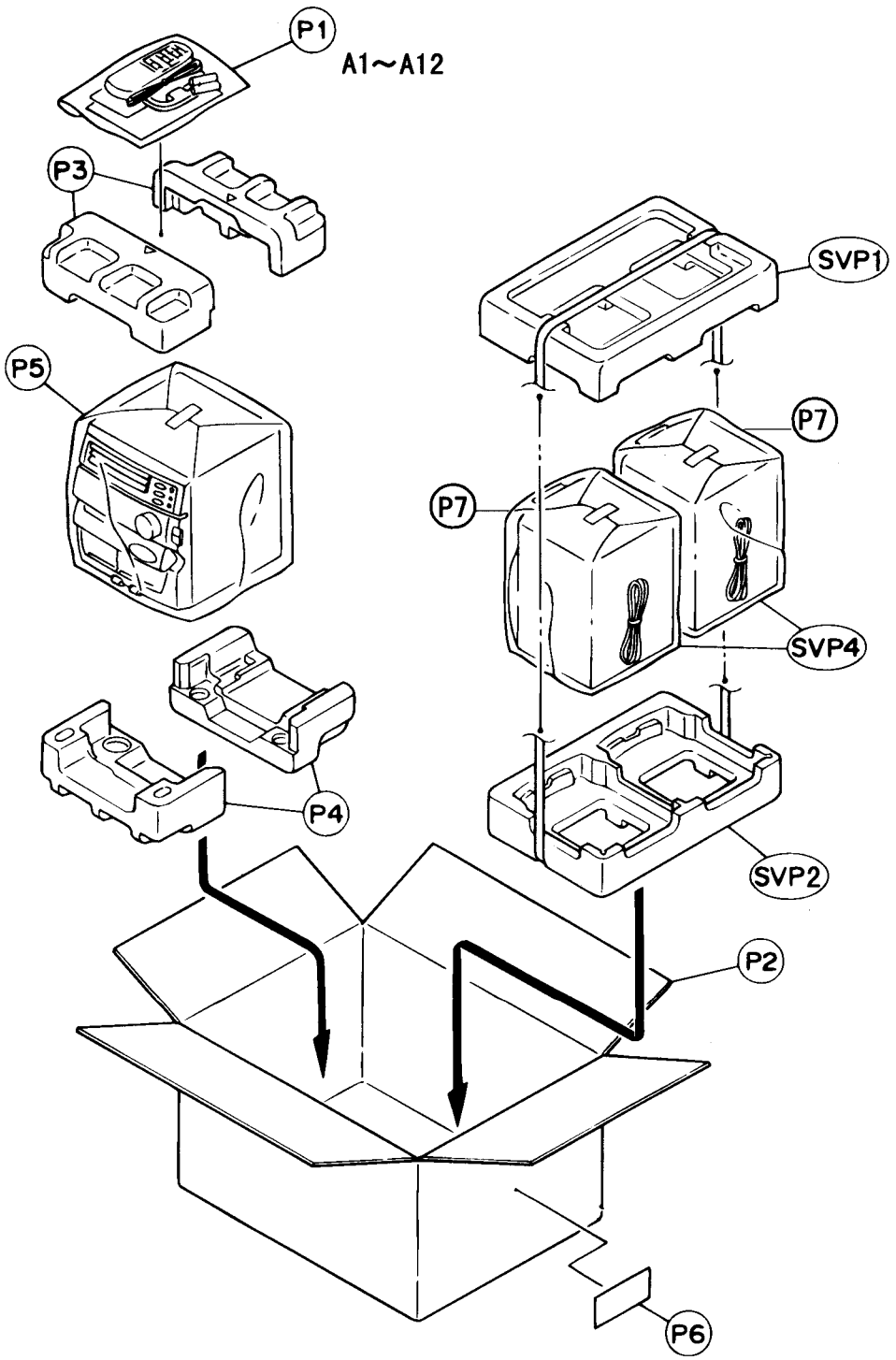

■ Packing Parts List (A/U/UB/US/UT/UX/C/J version)

BLOCK NO. M5MM

⚠	REF.	PARTS NO.	PARTS NAME	REMARKS	QTY	SUFFIX	CLR
	P 1	E309758-002	POLY BAG		1		
	P 2	GV20010-001A	CAARTON	MASTER CART.	1	C,J	
		GV20010-002A	CARTON	MASTER CART.	1	A,U,UB	
		GV20010-002A	CARTON	MASTER CART.	1	US,UT,UX	
	P 3	GV10005-001A	CUSHION UPPER	FOR MASTER CART	1	UT,UX,C,J	
		GV10005-001A	CUSHION UPPER	FOR MASTER CART	1	A,U,UB,US	
	P 4	GV10006-001A	CUSHION BOTTOM	FOR MASTER CART	1	US,UT,UX	
		GV10006-001A	CUSHION BOTTOM	FOR MASTER CART	1	A,U,UB	
	P 5	E309758-017	POLY BAG		1		
	P 6	----------	COMPUTER LABEL		1		
	P 7	138736001051	PLY BAG	FOR SPEAKER	2		
	SPV 1	139764941023	SPK CUSHION	UPPER	1		
	SPV 2	139764941024	SPK CUSHION	BOTTOM	1		

■ Accessories Parts List (A/U/UB/US/UT/UX/C/J version)

BLOCK NO. M6MM

⚠	REF.	PARTS NO.	PARTS NAME	REMARKS	QTY	SUFFIX	CLR
	A 1	EQB4001-015	AM LOOP ANT		1		
	A 2	GVT0002-001A	INSTRUCTIONS		1	J	
		GVT0002-002A	INSTRUCTIONS		1	C	
		GVT0002-003A	INSTRUCTIONS		1	U,UB,US	
		GVT0002-003A	INSTRUCTIONS		1	UT,UX	
		GVT0002-004A	INSTRUCTIONS		1	A	
	A 4	EWP201-011	B. IN ANT		1		
	A 5	RM-SED302TXU	REMOCON		1	US,UT,UX	
		RM-SED40TU	W.LESS REMOCOM		1	C,J	
		RM-SED302TXU	REMOCON		1	A,U,UB	
		RM-SED302TXU	REMOCON		1	UT,UX	
	A 6	R6SPTT/2STS	BATTERY		2		
		R6SPTT/2STS	BATTERY		2		
	A 9	BT-56002-1	SVC CENTER LIST		1	A	
		BT-20044G	SAFETY INST.		1	C,J	
		BT-20071B	SVC CENTER LIST		1	C	
	A 10	BT-51006-1	REGIST CARD		1	J	
		BT-52002-1	WARRANTY CARD		1	C	
		BT-56001-1	WARRANTY CARD		1	A	
	A 11	ENZ2202-001	AC PLUG ADAPTER		1	U,US	
	A 12	VMZ0139-001	CONTHI PLUG		1	UT,UX	
	SPV 4	SPD302J-SPBOX	SPEAKER ASS'Y		2		

■ SP-D302

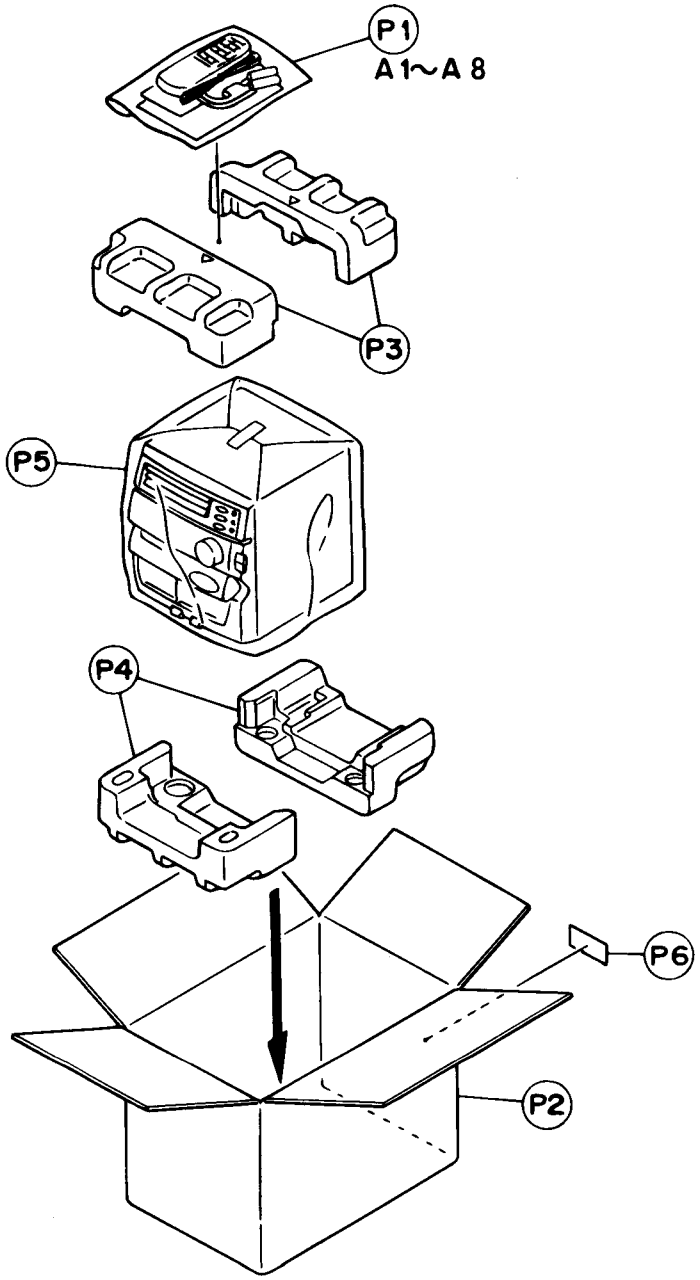

■ SP-D432

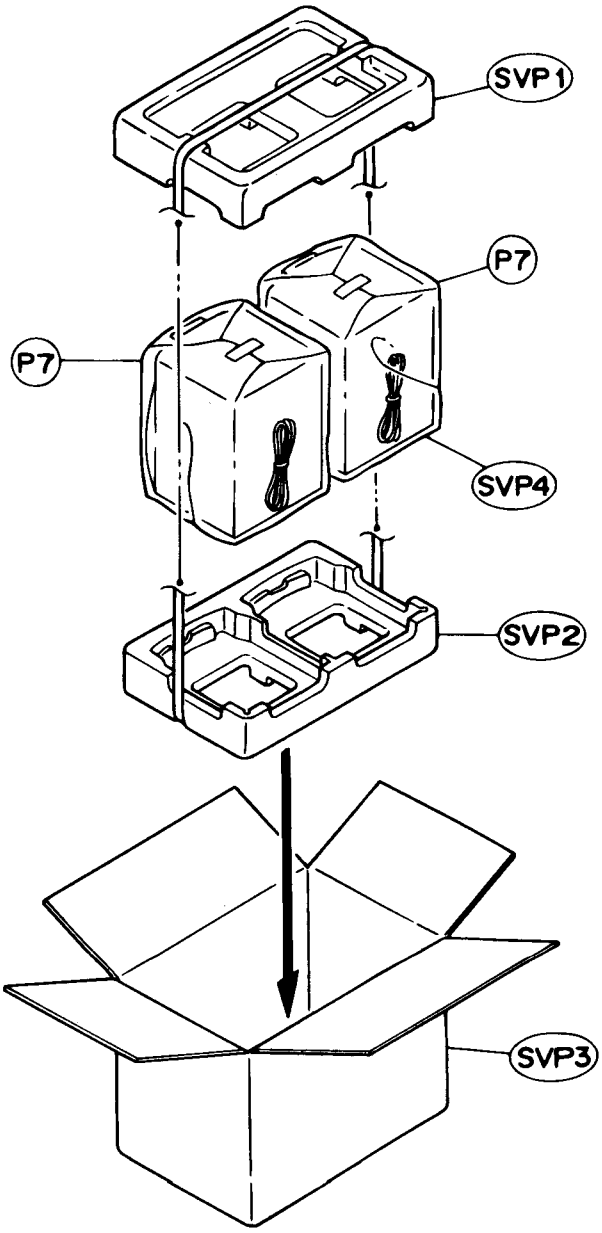

■ Packing Parts List (B/E/EE/EN version)

BLOCK NO. M5MM

⚠	REF.	PARTS NO.	PARTS NAME	REMARKS	QTY	SUFFIX	CLR
	P 1	E309758-002	POLY BAG		1		
	P 2	GV20010-003A	CARTON	MASTER CAART	1	B,E,EE,EN	
	P 3	GV10007-001A	CUSHION UPPER	FOR MASTER CART	1	B,E,EE,EN	
	P 4	GV10008-001A	CUSHION BOTTOM	FOR MASTER CART	1	B,E,EE,EN	
	P 5	E309758-017	POLY BAG		1		
	P 6	----------	COMPUTER LABEL		1		
	P 7	138736001051	POLY BAG	FOR SPEAKER	2		
	SPV 1	139764941023	SPK CUSHION	UPPER	1		
	SPV 2	139764941024	SPK CUSHION	BOTTOM	1		
	SPV 3	140774881119	SPK CARTON		1		

■ Accessories Parts List (B/E/EE/EN version)

BLOCK NO. M6MM

⚠	REF.	PARTS NO.	PARTS NAME	REMARKS	QTY	SUFFIX	CLR
	A 1	EQB4001-015	AM LOOP ANT		1		
	A 2	GVT0002-005A	INSTRUCTIONS		1	E	
		GVT0002-006A	INSTRUCTIONS		1	EN	
		GVT0002-007A	INSTRUCTIONS		1	B	
		GVT0002-008A	INSTRUCTIONS		1	EE	
	A 4	EWP503-001	ANT.WIRE		1		
	A 5	RM-SED40TEU	REMOCON		1	B,E,EE,EN	
	A 6	R6SPTT/2STS	BATTERY		2		
		R6SPTT/2STS	BATTERY		2		
	A 7	BT-54008-1	WARRANTY CARD		1	B,E,EN	
	A 8	F43486-340A	BS SAFETY INST		1	B	
	SPV 4	SPD302H-SPBOX	SPEAKER ASS'Y		2		